Technical Data: 4CES-6Y

Dimensions and Connections

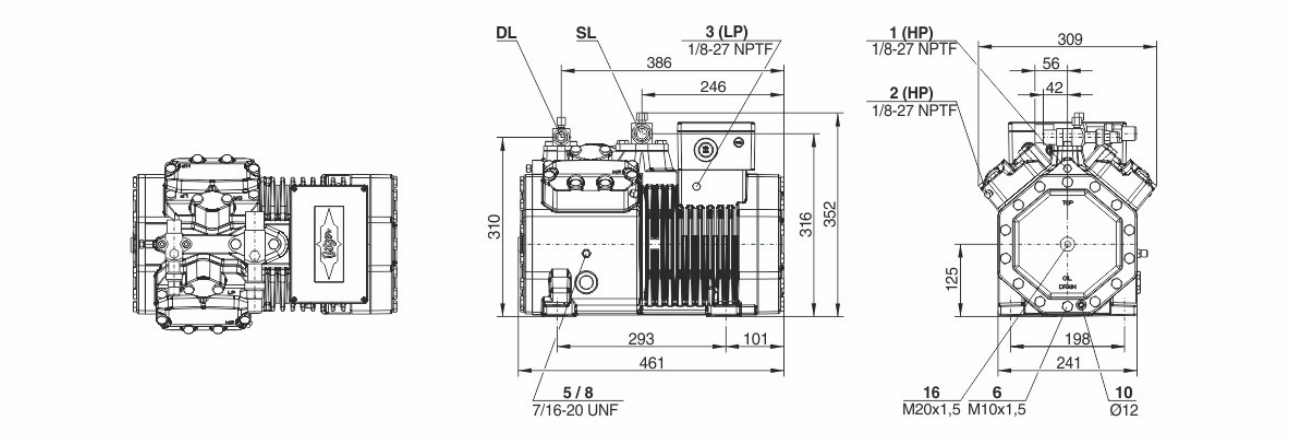

Technical Data

Technical Data	
Displacement (1450rpm 50Hz)	32,48 m3/h
Displacement (1750rpm 60Hz)	39,20 m3/h
No. of cylinder x bore x stroke	4 x 55 mm x 39,3 mm
Weight	99 kg
Max. pressure (LP/HP)	19 / 32bar
Connection suction line	28 mm - 1 1/8"
Connection discharge line	22 mm - 7/8"
Oil type R134a/R407C/R404A/R507A/R407A/R407F	BSE32(Standard) | R134a tc>70°C: BSE55 (Option)
Oil type R22 (R12/R502)	B5.2 (Option)
Oil type R1234yf	BSE32 (Standard) | R1234yf tc>70°C : BSE55 (Option)
Oil type R1234ze	BSE55 (Standard) | to>15°C: BSE85K (Option) | tc>70°C: BSE85K (Option)
Oil type R454C/R455A	BSE32 (Standard)
Oil type R515B	BSE55 (Standard) | to>15°C: BSE85K (Option) | tc>70°C: BSE85K (Option)
Motor data	
Motor version	2
Motor voltage (more on request)	440-480V Y-3-60Hz
Max. operating current	17.7 A
Starting current (Rotor locked)	82.4 A
Max. power input	11,7 kW
Extent of delivery (standard)	
Motor protection	SE-B3 (Option), SE-B2 (Option), CM-RC-02 (Standard)
Enclosure class	IP66
Vibration dampers	Standard
Oil charge	2,00 dm³
Discharge shut-off valve	Standard
Suction shut-off valve	Standard
Available options	
Discharge gas temperature sensor	Option
Capacity control	100-50% (Option)
Capacity Control - infinite	100-10% (Option)
Additional fan	Option
Oil heater	0..120 W PTC (Option)
Oil level monitoring	OLC-K1 (Option)
Sound measurement	
Sound power level (-10°C / 45°C)	74,1dB(A) @ 50Hz
Sound power level (-35°C / 40°C)	76,5 dB(A) @ 50Hz
Sound pressure level @ 1m (-10°C / 45°C)	66,11dB(A) @ 50Hz
Sound pressure level @ 1m (-35°C / 40°C)	68,5 dB(A) @ 50Hz

Semi-hermetic Reciprocating Compressors

Motor 1 = e.g. 4TES-12 with 12 "HP", primary for air-conditioning (e.g. R22,R407C) and air-conditioning with R134a at high ambient temperatures.
Motor 2 = e.g. 4TES-9 with 8 "HP", universal Motor for medium and low temperature application (e.g. R404A, R507A, R407A, R407F) and air-conditioning with R134a
Motor 3 = e.g. 4TES-8, for medium temperature applications and R134a

For more information concerning the application range use the "Limits" button.

Operation modes 4VES-7 to 6FE-44 and 44JE-30 to 66FE-88 with R407F/R407A/R22

CIC = liquid injection with low temperature application, suction gas cooled motor.

ASERCOM certified performance data

The Association of European Refrigeration Component Manufacturers has implemented a procedure of certifying performance data. The high standard of these certifications is assured by:

* plausibility tests of the data performed by experts.

* regular measurements at independent institutes.

These high efforts result in the fact that only a limited number of compressors can be submitted. Due to this not all BITZER compresors are certified until now. Performance data of compressors which fulfil the strict requirements may carry the label "ASERCOM certified". In this software you will find the label at the respective compressors on the right side below the field "result" or in the print out of the performance data. All certified compressors and further information are listed on the homepage of ASERCOM.

Condensing capacity

The condensing capacity can be calculated with or without heat rejection. This option can be set in the menu Program Options. The heat rejection is constantly 5 % of the power consumption. The condensing capacity is to be found in the line Condensing cap. (with HR) resp. Condensing capacity.

Data for sound emission

Data based on 50 HZ apllication (IP-units 60 Hz) and R404A if not declared.
Sound pressure level: values based on free field area conditions with hemisperhical sound emission in 1 meter distance.

General remarks regarding sound data

Listed sound data were measured under testing conditions in our laboratory. For this purpose the free-standing test sample is mounted on a solid foundation plate and the pipework is connected vibration-free to the largest extend possible. Suction and discharge lines are fixed in a flexible configuration, such that a transmission of vibrations to the environment can be largely excluded. In real installations considerable differences might be observed, compared to the measurements in the laboratory. The airborne sound emitted by the compressor can be reflected from surfaces of the system and this may increase the airborne sound level measured close to the compressor. Vibrations caused by the compressor are also transferred to the system by the compressor feet and piping depending on the damping ratio of the fixings. Thus, the vibrations can induce other components to such an extent that these components contribute to an increase in airborne sound emission. If required, the transfer of vibrations to the system can be minimized by suitable fixing and damping elements.