# SPARE PARTS LIST

## OSK8551

OPEN DRIVE SCREW COMPRESSOR

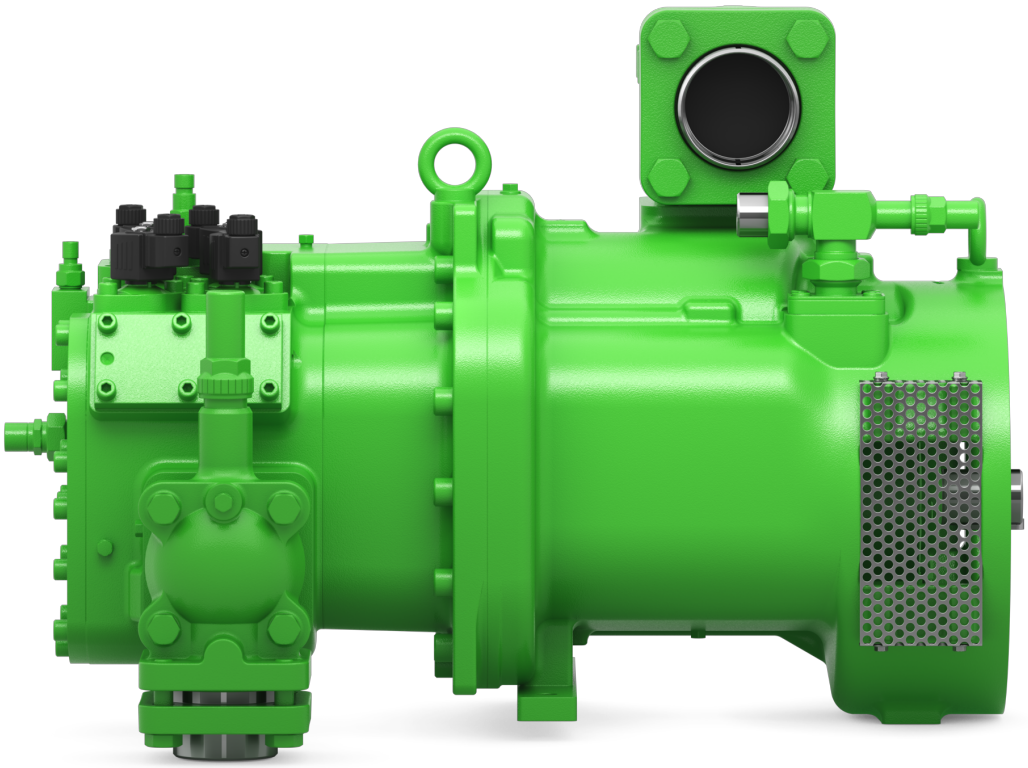

# Important recommendations for the user

An order can only be executed if a full designation is given.

**Example for ordering: Please note that this order example does not necessarily refer to your product.**

| Quantity | Description | Type | Article no. | Serial number |
|---|---|---|---|---|
| 1 | Set of gasket | HSK8561-80 | 372 825 02 | 10 743 00001 |

In cases where stages of modification are indicated, please give the compressor serial number as well as the ref.- number, without this latest design will be supplied.

**Compressor types older than 10 years are not entered any more in this list.**

**Legend**

| | |
|---|---|
| (123 456 78) | Ref. no. In brackets: no more available |
| (123 456 78)↓ | no more available, but interchangeable by next modification step |
| (23) | Item no. in brackets: not shown in the exploded view |

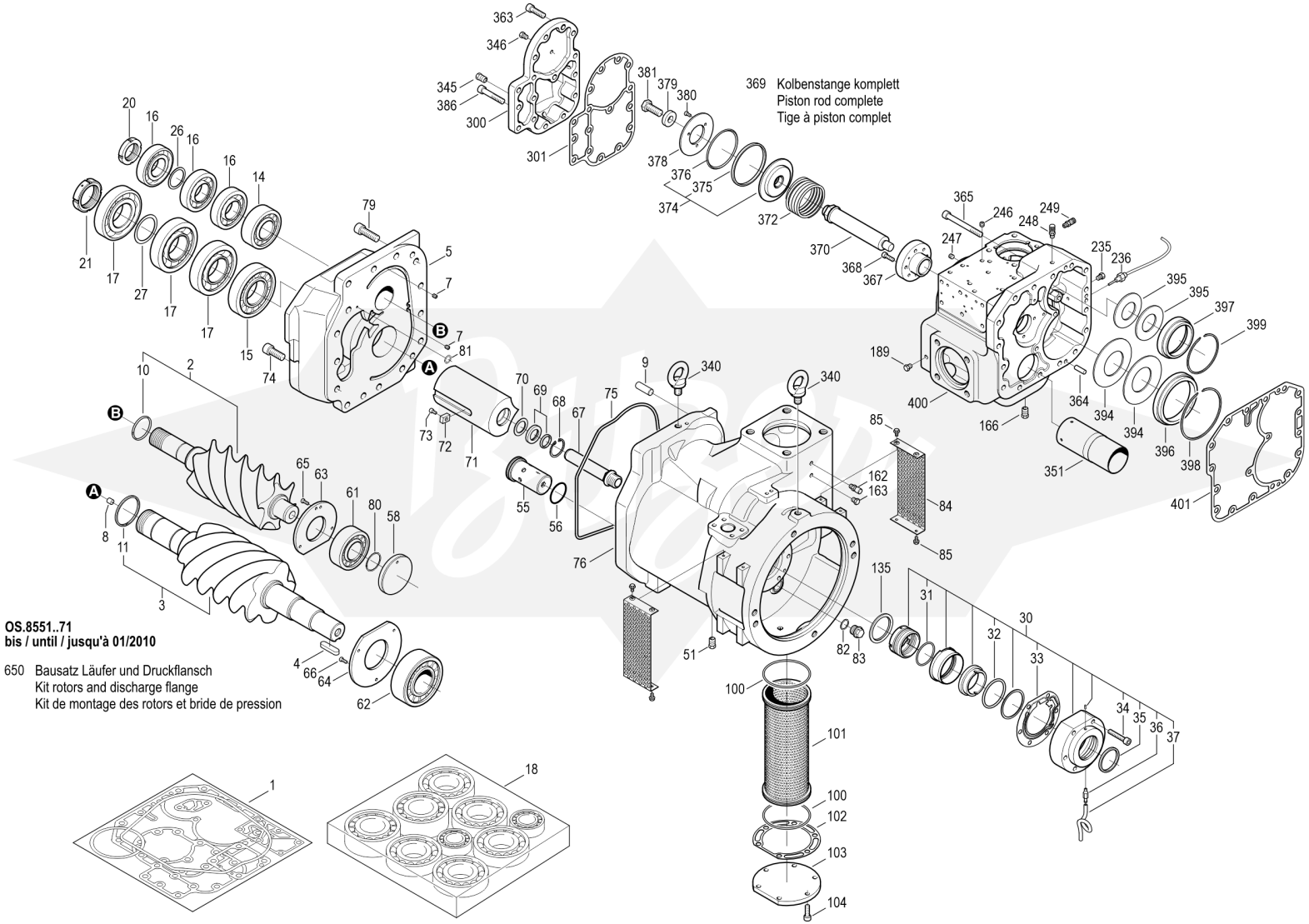
369 Kolbenstange komplett
Piston rod complete
Tige à piston complet
OS.8551..71
bis / until / jusqu'à 01/2010
650 Bausatz Läufer und Druckflansch
Kit rotors and discharge flange
Kit de montage des rotors et bride de pression

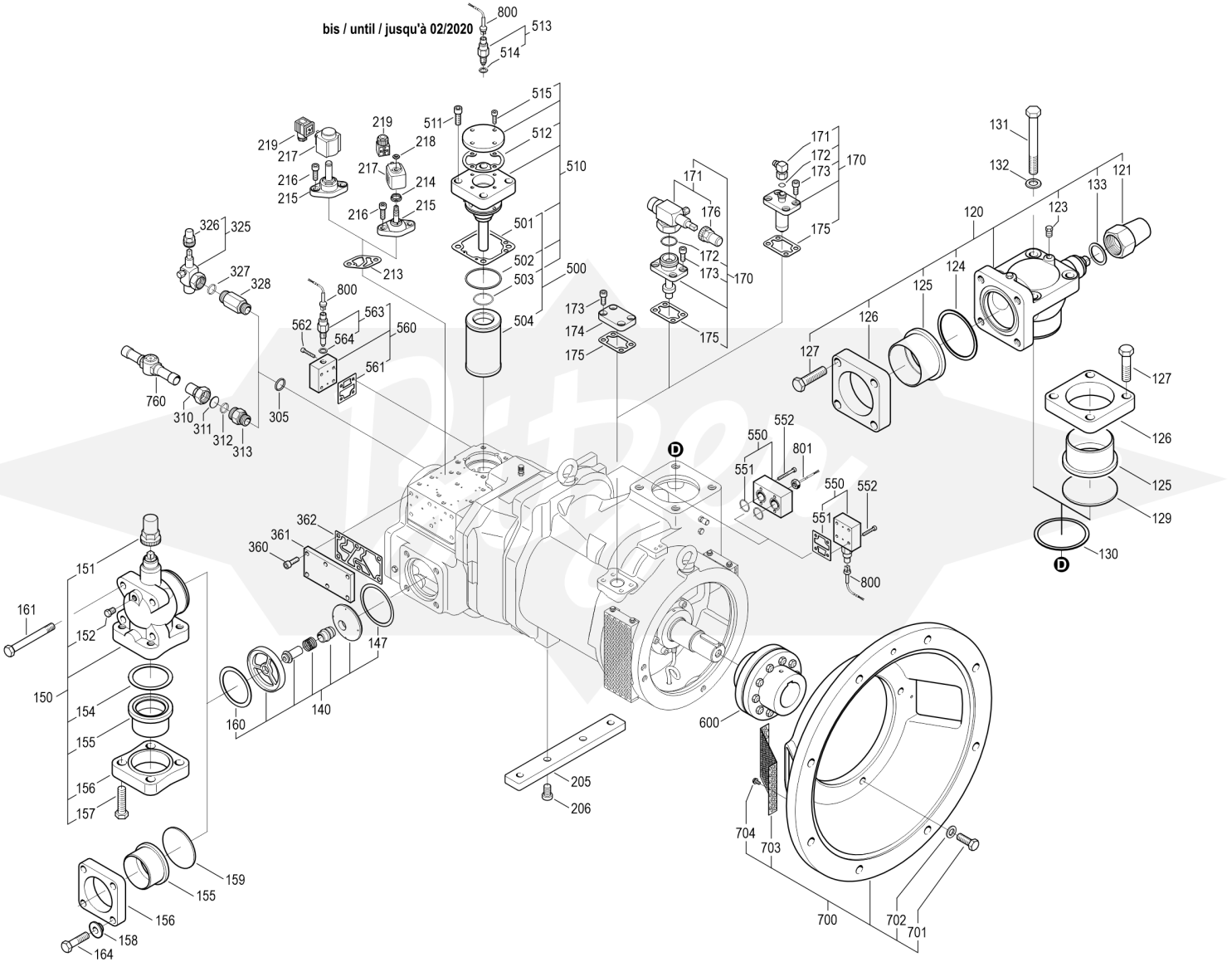
bis / until / jusqu'à 02/2020
800
513
514
515
511
512
510
219
217
216
215
218
214
213
501
502
503
500
504
326
325
327
328
562
563
564
560
561
760
310
311
312
313
305
171
172
173
170
176
175
174
131
132
133
121
120
123
124
125
126
127
129
130
550
551
552
801
362
361
360
147
140
160
151
152
161
150
154
155
156
157
158
159
164
205
206
600
704
703
700
702
701

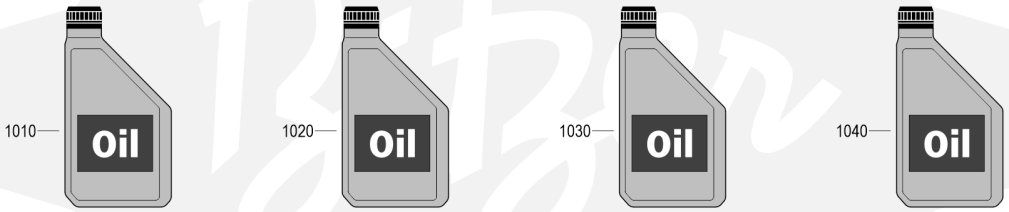
1010
Oil
1020
Oil
1030
Oil
1040
Oil

## Recommended parts

| Recomended | Item | Qty. | Change stage | From year (approx.) | Article no. | Description | Contains | Contained In | Technical Information |
|---|---|---|---|---|---|---|---|---|---|
| ! | 1 | 1 | | | 37282302 | Gasket set | | | |
| ! | 30 | 1 | | | 37402207 | Shaft seal | | | |
| ! | 82 | 1 | | | 38240305 | Gasket ring | | | aluminum |
| ! | 101 | 1 | | | 36202401 | Suction gas filter | | | |
| ! | 140 | 1 | | | 36911601 | Check valve | | | complete |
| ! | 170 | 1 | | | 36133009 | ECO connection | | | |
| ! | 172 | 1 | | | 37220001 | Gasket ring | | 1,170 | PTFE |
| ! | 213 | 4 | 2 | | 37270807 | Gasket | | 1 | metallic support |
| ! | 214 | 4 | 2 | 11/2007 | 37591401 | Retaining ring with lugs | | | |
| ! | 215 | 4 | 3 | 11/2007 | 34716101 | Solenoid valve | | | LA66 without solenoid coil |
| ! | 217 | 4 | 1 | | 34330401 | Solenoid coil | | | 48 V - DC with electric connector of the device |
| ! | 217 | 4 | 2 | 11/2007 | (34331306)↓ | Solenoid coil | | | 48 V - DC with electric connector of the device |
| ! | 217 | 4 | 3 | | 34331332 | Solenoid coil | | | 48 V - DC without electric connector of the device |
| ! | 217 | 4 | 1 | | 34330404 | Solenoid coil | | | 24 V - 20 W - DC with electric connector of the device |
| ! | 217 | 4 | 2 | 11/2007 | (34331304)↓ | Solenoid coil | | | 24 V - DC with electric connector of the device |
| ! | 217 | 4 | 3 | | 34331330 | Solenoid coil | | | 24 V - DC without electric connector of the device |
| ! | 217 | 4 | 1 | | 34330405 | Solenoid coil | | | 115 V - DC with electric connector of the device |
| ! | 217 | 4 | 2 | 11/2007 | (34331305)↓ | Solenoid coil | | | 115 V - DC with electric connector of the device |
| ! | 217 | 4 | 3 | | 34331331 | Solenoid coil | | | 115 V - DC without electric connector of the device |
| ! | 217 | 4 | 1 | | 34331102 | Solenoid coil | | | 110 V - 50/60 Hz // 120 V - 60 Hz |

## Recommended parts

| Recomended | Item | Qty. | Change stage | From year (approx.) | Article no. | Description | Contains | Contained In | Technical Information |
|---|---|---|---|---|---|---|---|---|---|
| | | | | | | | | | without electric connector of the device |
| ! | 217 | 4 | 2 | 11/2007 | (34331302)↓ | Solenoid coil | | | 115 V - 60 Hz with electric connector of the device |
| ! | 217 | 4 | 3 | | 34331313 | Solenoid coil | | | 115 V - 60 Hz without electric connector of the device |
| ! | 217 | 4 | 1 | | 34330502 | Solenoid coil | | | 24 V - 1 - 50 Hz with electric connector of the device |
| ! | 217 | 4 | 2 | 11/2007 | (34331303)↓ | Solenoid coil | | | 24 V - 50/60 Hz with electric connector of the device |
| ! | 217 | 4 | 3 | | 34331329 | Solenoid coil | | | 24 V - 50/60 Hz without electric connector of the device |
| ! | 217 | 4 | 1 | | 34330902 | Solenoid coil | | | 230 V - 50 Hz without electric connector of the device |
| ! | 217 | 4 | 2 | 11/2007 | (34331301)↓ | Solenoid coil | | | 230 V - 50/60 Hz with electric connector of the device |
| ! | 217 | 4 | 3 | | 34331314 | Solenoid coil | | | 230 V - 50/60 Hz without electric connector of the device |
| ! | 217 | 4 | 1 | | 34331101 | Solenoid coil | | | 230 V - 1 - 60 Hz without electric connector of the device |
| ! | 217 | 4 | 2 | 11/2007 | (34331301)↓ | Solenoid coil | | | 230 V - 50/60 Hz with electric connector of the device |
| ! | 217 | 4 | 3 | | 34331314 | Solenoid coil | | | 230 V - 50/60 Hz without electric connector of the device |
| ! | 219 | 4 | 3 | | 38901902 | Electric connector of the device | | | |
| ! | 236 | 1 | | | 34703204 | Sensor | | | 100 °C |
| ! | 500 | 1 | | | 36220406 | Oil filter | | | with o-rings |
| ! | 550 | 1 | 2 | 07/2008 | 34750106 | Oil flow switch | | | complete |
| ! | 560 | 1 | | | 34795101 | Pressure switch | | | red |

# Parts list

| Recomended | Item | Qty. | Change stage | From year (approx.) | Article no. | Description | Contains | Contained In | Technical Information |
|---|---|---|---|---|---|---|---|---|---|
| ! | 1 | 1 | | | 37282302 | Gasket set | | | |
| | 2 | 1 | 1 | 04/2007 | (30257531)↓ | Female rotor | | | only available together with male rotor serial number required |
| | 2 | 0 | 2 | 01/2010 | - | Article cancelled | | 650 | |
| | 2 | 1 | 3 | 02/2010 | 30257506 | Female rotor | | | only available together with male rotor serial number required |
| | 3 | 1 | 1 | 04/2007 | (30257440)↓ | Male rotor | | | only available together with female rotor serial number required |
| | 3 | 0 | 2 | 01/2010 | - | Article cancelled | | 650 | |
| | 3 | 1 | 3 | 02/2010 | 30257442 | Male rotor | | | only available together with female rotor serial number required |
| | 4 | 1 | | | 38400138 | Parallel key | | | |
| | 5 | 1 | 1 | 04/2007 | (30032303)↓ | Discharge flange | | | serial number required |
| | 5 | 0 | 2 | 01/2010 | - | Article cancelled | | 650 | |
| | 5 | 1 | 3 | 02/2010 | (30032307)↓ | Discharge flange | | | serial number required |
| | 5 | 1 | 4 | 04/2011 | 30033001 | Discharge flange | | | serial number required |
| | 5 | 1 | 5 | 04/2015 | 30033005 | Discharge flange | | | serial number required |
| | 7 | 2 | | | 31400824 | Nozzle | | | |
| | 8 | 1 | | | 31403902 | Nozzle | | | |
| | 9 | 2 | | | 38301111 | Parallel pin | | | steel |
| | 10 | 1 | | | 37410012 | Piston ring | | 2 | |
| | 11 | 1 | | | 37410011 | Piston ring | | 3 | |
| | 14 | 1 | | | 38620028 | Cylindrical roller bearing | | 18 | |
| | 15 | 1 | 1 | | 38620034 | Cylindrical roller bearing | | 18 | |
| | 15 | 1 | 2 | 04/2007 | 38620029 | Cylindrical roller bearing | | 18 | |
| | 16 | 3 | 1 | | 38610008 | Angular ball bearing | | 18 | |
| | 16 | 2 | 2 | 02/2010 | 38610008 | Angular ball bearing | | 18 | |

# Parts list

| Recomended | Item | Qty. | Change stage | From year (approx.) | Article no. | Description | Contains | Contained In | Technical Information |
|---|---|---|---|---|---|---|---|---|---|
| | 17 | 3 | 1 | | 38610013 | Angular ball bearing | | 18 | |
| | 17 | 2 | 2 | 02/2010 | 38610013 | Angular ball bearing | | 18 | |
| | 18 | 1 | 1 | 04/2007 | (38660106)↓ | Roller bearing unit | | | complete // kit = 10 pieces |
| | 18 | 1 | 2 | | 38660111 | Roller bearing unit | | | complete with spacer rings // kit = 8 pieces |
| | 18 | 1 | 3 | 02/2010 | 38660108 | Roller bearing unit | | | complete // kit = 8 pieces |
| | 20 | 1 | | | 38190203 | Grooved nut | | | |
| | 21 | 1 | | | 38190208 | Grooved nut | | | |
| | 26 | 1 | 1 | | (38209417) | Adjusting washer | | | |
| | 26 | 0 | 2 | 02/2010 | - | Article cancelled | | | |
| | 27 | 1 | 1 | | (38209418) | Adjusting washer | | | |
| | 27 | 0 | 2 | 02/2010 | - | Article cancelled | | | |
| | 28 | 1 | | 02/2010 | 31407201 | Inner ring | | 18 | |
| | 29 | 1 | | 02/2010 | 31407202 | Inner ring | | 18 | |
| ! | 30 | 1 | | | 37402207 | Shaft seal | | | |
| | 31 | 1 | | | 37200202 | O-ring | | 30 | CR for mineral oils |
| | 32 | 1 | | | 37200204 | O-ring | | 30 | CR for mineral oils |
| | 33 | 1 | | | 37232202 | Gasket | | 1,3 | |
| | 34 | 6 | | | 38030626 | Cheese-head screw | | 30 | |
| | 35 | 1 | | | 38250102 | Gasket ring | | 30 | NBR |
| | 36 | 1 | 1 | | 36524101 | Screwed nipple | | 30 | |
| | 36 | 1 | 2 | | 36524102 | Screwed nipple | | 30 | |
| | 37 | 1 | | | 34530102 | Hose | | 30 | |
| | 51 | 1 | | | 36611008 | Plug | | | steel |
| ! | 55 | 1 | 1 | | (36110602)↓ | Pressure relief valve | | | 34 bar |

# Parts list

| Recomended | Item | Qty. | Change stage | From year (approx.) | Article no. | Description | Contains | Contained In | Technical Information |
|---|---|---|---|---|---|---|---|---|---|
| | 55 | 1 | 2 | | 36110606 | Pressure relief valve | | | 28 bar |
| | 56 | 1 | | | 37200202 | O-ring | | 1 | CR for mineral oils |
| | 58 | 1 | | | 31300043 | Washer | | | |
| | 61 | 1 | | | 38620028 | Cylindrical roller bearing | | 18 | |
| | 62 | 1 | | | 38620034 | Cylindrical roller bearing | | 18 | |
| | 63 | 1 | | | 31300483 | Spacer washer | | | |
| | 64 | 1 | | | 31300486 | Spacer washer | | | |
| | 65 | 3 | 1 | | (38034302)↓ | Cheese-head screw | | | |
| | 65 | 3 | 2 | | 31800010 | Cheese-head screw | | | |
| | 66 | 3 | 1 | | (38034302)↓ | Cheese-head screw | | | |
| | 66 | 3 | 2 | | 31800010 | Cheese-head screw | | | |
| | 67 | 1 | | | 36021202 | Slider guide | | | |
| | 68 | 1 | | | 38223126 | Retaining ring with lugs | | | |
| | 69 | 1 | | | 31203602 | Seat ring | | | |
| | 70 | 1 | | | 31300029 | Washer | | | |
| | 71 | 1 | | | - | Not available separately | | 76 | |
| | 72 | 1 | 1 | | 38490201 | Sliding block | | | |
| | 72 | 1 | 2 | 06/2009 | 38490203 | Sliding block | | | |
| | 73 | 1 | 1 | | 38030651 | Cheese-head screw | | | |
| | 73 | 1 | 2 | 06/2009 | 38030652 | Cheese-head screw | | | |
| | 74 | 4 | | | 38030703 | Cheese-head screw | | | |
| | 75 | 1 | | | 37202135 | O-ring | | 1 | |
| | 76 | 1 | | | 30025103 | Housing | | | serial number required |
| | 79 | 9 | 1 | | 38030701 | Cheese-head screw | | | |
| | 79 | 11 | 2 | 12/2007 | 38030701 | Cheese-head screw | | | |

# Parts list

| Recomended | Item | Qty. | Change stage | From year (approx.) | Article no. | Description | Contains | Contained In | Technical Information |
|---|---|---|---|---|---|---|---|---|---|
| | 80 | 1 | | | 38224208 | Snap ring | | | steel |
| | 81 | 1 | | | 37202136 | O-ring | | 1 | |
| ! | 82 | 1 | | | 38240305 | Gasket ring | | | aluminum |
| | 83 | 1 | | | 36611401 | Magnetic screw | | | permanent magnet |
| | 84 | 2 | | | 32490921 | Cover plate | | | |
| | 85 | 8 | | | 38020252 | Self-locking screw | | | |
| | 100 | 2 | 1 | | (37202138)↓ | O-ring | | 1 | |
| | 100 | 2 | 2 | 10/2012 | 37203309 | O-ring | | 1 | FPM |
| ! | 101 | 1 | | | 36202401 | Suction gas filter | | | |
| | 102 | 1 | | | 37236001 | Gasket | | 1 | |
| | 103 | 1 | | | 31405801 | Sealing cover | | | |
| | 104 | 6 | | | 38030632 | Cheese-head screw | | | |
| | 120 | 1 | 1 | | (36133812)↓ | Shut-off valve | | | PS35\|DN100\|Sxx\|TX\|105\|4LA122\|AF 1+2+3 // complete |
| | 120 | 1 | 2 | 01/2013 | 36133923 | Shut-off valve | | | PS35\|DN100\|GGxx\|TX\|105\|4LA122\|AF1+2+3 // complete |
| | 121 | 1 | 1 | | (36620109)↓ | Protective cap | | 120 | steel |
| | 121 | 1 | 2 | | 37501417 | Protective cap | | 120 | plastic - GRP wrench size: 65 |
| | 121 | 1 | 3 | 01/2013 | (37501419)↓ | Protective cap | | 120 | plastic - GRP |
| | 121 | 1 | 4 | | 36620124 | Protective cap | | 120 | plastic - GRP wrench size: 36 |
| | 123 | 2 | 1 | | 36611008 | Plug | | 120 | steel |
| | 123 | 1 | 2 | 11/2010 | 36611008 | Plug | | | steel |
| | 124 | 1 | | | 37230313 | Gasket | | 1,120 | |
| | 125 | 1 | | | 36532117 | Brazing and welding bush | | 120 | steel |
| | 126 | 1 | 1 | | (36712109)↓ | Counter flange | | 120 | |
| | 126 | 1 | 2 | | (36712111)↓ | Counter flange | | 120 | |

# Parts list

| Recomended | Item | Qty. | Change stage | From year (approx.) | Article no. | Description | Contains | Contained In | Technical Information |
|---|---|---|---|---|---|---|---|---|---|
| | 126 | 1 | 3 | | 36714002 | Kit counter flange | | | assembly |
| | 126 | 1 | 4 | 09/2013 | 36712115 | Counter flange | | 120 | |
| | 127 | 4 | 1 | | 38006001 | Hexagon head screw | | 120 | |
| | 127 | 4 | 2 | 09/2013 | 38001904 | Hexagon head screw | | 120,126 | |
| | 129 | 1 | | | 32050709 | Blanking plate | | | |
| | 130 | 1 | | | 37230313 | Gasket | | 1,120 | |
| | 131 | 4 | 1 | | 38006002 | Hexagon head screw | | | |
| | 131 | 4 | 2 | 01/2013 | 38006005 | Hexagon head screw | | 120 | |
| | 132 | 4 | 1 | | 38200160 | Washer | | | |
| | 132 | 0 | 2 | 03/2012 | - | Article cancelled | | | |
| | 133 | 1 | 1 | | (37214301) | Gasket | | 120 | elastomer |
| | 133 | 0 | 2 | 05/2012 | - | Article cancelled | | | |
| | 135 | 1 | | | 38250001 | Lip seal | | | |
| ! | 140 | 1 | | | 36911601 | Check valve | | | complete |
| | 147 | 1 | | | 37230117 | Gasket | | 1,140 | |
| | 150 | 1 | 1 | | 36133808 | Shut-off valve | | | PS35\|DN80\|Sxx\|TX\|80\|4LA99\|AF1+2+3 // complete |
| | 150 | 1 | 2 | 01/2013 | 36133817 | Shut-off valve | | | PS35\|DN80\|Sxx\|TX\|80\|4LA99\|AF1+2+3 // complete |
| | 151 | 1 | 1 | | (37501419)↓ | Protective cap | | 150 | plastic - GRP |
| | 151 | 1 | 2 | | 36620123 | Protective cap | | 150 | plastic - GRP wrench size: 36 |
| | 152 | 1 | | | 36611008 | Plug | | 150 | steel |
| | 154 | 1 | | | 37230303 | Gasket | | 1,150 | |
| | 155 | 1 | | | 36532105 | Brazing and welding bush | | 150 | steel |
| | 156 | 1 | 1 | | 36712103 | Counter flange | | 150 | |
| | 156 | 1 | 2 | 01/2013 | 36712114 | Counter flange | | 120 | |

# Parts list

| Recomended | Item | Qty. | Change stage | From year (approx.) | Article no. | Description | Contains | Contained In | Technical Information |
|---|---|---|---|---|---|---|---|---|---|
| | 157 | 4 | 1 | | 38011101 | Hexagon head screw | | 150 | |
| | 157 | 4 | 2 | 01/2013 | 38010955 | Hexagon head screw | | 120 | |
| | 158 | 4 | 1 | | 31100906 | Washer | | | |
| | 158 | 0 | 2 | 01/2013 | - | Article cancelled | | | |
| | 159 | 1 | 1 | | (32050706)↓ | Blanking plate | | | |
| | 159 | 1 | 2 | | (32050710)↓ | Blanking plate | | | |
| | 159 | 1 | 3 | | 32050712 | Blanking plate | | | |
| | 160 | 1 | | | 37230105 | Gasket | | 1,140 | |
| | 161 | 4 | | | 38000954 | Hexagon head screw | | | |
| | 162 | 1 | 1 | | (36150101)↓ | Schrader valve | | | straight |
| | 162 | 1 | 2 | | 36150121 | Schrader valve | | | straight |
| | 162 | 1 | 3 | 07/2020 | 36611001 | Plug | | | steel |
| | 163 | 1 | | | 36611001 | Plug | | | steel |
| | 164 | 4 | 1 | | 38000957 | Hexagon head screw | | | |
| | 164 | 4 | 2 | 01/2013 | 38010955 | Hexagon head screw | | | |
| | 166 | 1 | 1 | | 36611008 | Plug | | | steel |
| | 166 | 0 | 2 | 06/2007 | - | Article cancelled | | | |
| ! | 170 | 1 | | | 36133009 | ECO connection | | | |
| | 170 | 1 | | | 36133209 | Liquid injection | | | complete // with integrated LI-nozzle |
| | 171 | 1 | | | 36132107 | Shut-off valve | | 170 | PS45\|DN25\|S36\|LX\|28\|1 3/4-12UN\|AF1+3 |
| | 171 | 1 | | | 36600112 | Angled pipe connection | | 170 | PS45\|S19\|3/4-16UNF\|Di10,1\|DaX\|XX |
| | 172 | 1 | | | 37220004 | Gasket ring | | 1,170 | 1 3/4 PTFE |
| ! | 172 | 1 | | | 37220001 | Gasket ring | | 1,170 | PTFE |
| | 173 | 4 | | | 38030623 | Cheese-head screw | | 170 | |
| | 174 | 1 | | | 36713301 | Blind flange | | | |

# Parts list

| Recomended | Item | Qty. | Change stage | From year (approx.) | Article no. | Description | Contains | Contained In | Technical Information |
|---|---|---|---|---|---|---|---|---|---|
| | 175 | 1 | 1 | | (37249501)↓ | Gasket | | 1,170 | |
| | 175 | 1 | 2 | | 37244401 | Gasket | | 1,170 | |
| | 176 | 1 | 1 | | (37501403)↓ | Protective cap | | 171 | plastic - GRP wrench size: 22 |
| | 176 | 1 | 2 | | 36620119 | Protective cap | | 171 | plastic - GRP wrench size: 27 |
| | 189 | 1 | | | 36611001 | Plug | | | steel |
| | 205 | 1 | | | 32730206 | Fixing rail | | | |
| | 206 | 2 | | | 38031271 | Cheese-head screw | | | |
| | 213 | 4 | 1 | | (37270803)↓ | Gasket | | 1 | |
| ! | 213 | 4 | 2 | | 37270807 | Gasket | | 1 | metallic support |
| ! | 214 | 4 | 2 | 11/2007 | 37591401 | Retaining ring with lugs | | | |
| | 215 | 4 | 1 | | (34769006)↓ | Solenoid valve | | | without solenoid coil |
| | 215 | 4 | 2 | | 34909513 | Retrofit kit capacity control | | | 24 V - DC - 10 W with solenoid coil, electric connector of the device, fixation ring, hexagon nut, gasket |
| | 215 | 4 | 2 | | 34909512 | Retrofit kit capacity control | | | 115 V - DC with solenoid coil, electric connector of the device, fixation ring, hexagon nut, gasket |
| | 215 | 4 | 2 | | 34909511 | Retrofit kit capacity control | | | 24 V - 50/60 Hz - 8 W with solenoid coil, electric connector of the device, fixation ring, hexagon nut, gasket |
| | 215 | 4 | 2 | | 34909510 | Retrofit kit capacity control | | | 115 V - 60 Hz - 8 W with solenoid coil, electric connector of the device, fixation ring, hexagon nut, gasket |
| | 215 | 4 | 2 | | 34909509 | Retrofit kit capacity control | | | 230 V - 50/60 Hz - 8 W with solenoid coil, electric connector of the device, fixation ring, hexagon nut, gasket |
| ! | 215 | 4 | 3 | 11/2007 | 34716101 | Solenoid valve | | | LA66 without solenoid coil |
| | 216 | 8 | | | 38030632 | Cheese-head screw | | | |
| ! | 217 | 4 | 1 | | 34330401 | Solenoid coil | | | 48 V - DC with electric connector of the device |

# Parts list

| Recomended | Item | Qty. | Change stage | From year (approx.) | Article no. | Description | Contains | Contained In | Technical Information |
|---|---|---|---|---|---|---|---|---|---|
| ! | 217 | 4 | 2 | 11/2007 | (34331306)↓ | Solenoid coil | | | 48 V - DC with electric connector of the device |
| ! | 217 | 4 | 3 | | 34331332 | Solenoid coil | | | 48 V - DC without electric connector of the device |
| ! | 217 | 4 | 1 | | 34330404 | Solenoid coil | | | 24 V - 20 W - DC with electric connector of the device |
| ! | 217 | 4 | 2 | 11/2007 | (34331304)↓ | Solenoid coil | | | 24 V - DC with electric connector of the device |
| ! | 217 | 4 | 3 | | 34331330 | Solenoid coil | | | 24 V - DC without electric connector of the device |
| ! | 217 | 4 | 1 | | 34330405 | Solenoid coil | | | 115 V - DC with electric connector of the device |
| ! | 217 | 4 | 2 | 11/2007 | (34331305)↓ | Solenoid coil | | | 115 V - DC with electric connector of the device |
| ! | 217 | 4 | 3 | | 34331331 | Solenoid coil | | | 115 V - DC without electric connector of the device |
| ! | 217 | 4 | 1 | | 34331102 | Solenoid coil | | | 110 V - 50/60 Hz // 120 V - 60 Hz without electric connector of the device |
| ! | 217 | 4 | 2 | 11/2007 | (34331302)↓ | Solenoid coil | | | 115 V - 60 Hz with electric connector of the device |
| ! | 217 | 4 | 3 | | 34331313 | Solenoid coil | | | 115 V - 60 Hz without electric connector of the device |
| ! | 217 | 4 | 1 | | 34330502 | Solenoid coil | | | 24 V - 1 - 50 Hz with electric connector of the device |
| ! | 217 | 4 | 2 | 11/2007 | (34331303)↓ | Solenoid coil | | | 24 V - 50/60 Hz with electric connector of the device |
| ! | 217 | 4 | 3 | | 34331329 | Solenoid coil | | | 24 V - 50/60 Hz without electric connector of the device |
| ! | 217 | 4 | 1 | | 34330902 | Solenoid coil | | | 230 V - 50 Hz without electric connector of the device |
| ! | 217 | 4 | 2 | 11/2007 | (34331301)↓ | Solenoid coil | | | 230 V - 50/60 Hz with electric connector of the device |

# Parts list

| Recomended | Item | Qty. | Change stage | From year (approx.) | Article no. | Description | Contains | Contained In | Technical Information |
|---|---|---|---|---|---|---|---|---|---|
| ! | 217 | 4 | 3 | | 34331314 | Solenoid coil | | | 230 V - 50/60 Hz without electric connector of the device |
| ! | 217 | 4 | 1 | | 34331101 | Solenoid coil | | | 230 V - 1 - 60 Hz without electric connector of the device |
| ! | 217 | 4 | 2 | 11/2007 | (34331301)↓ | Solenoid coil | | | 230 V - 50/60 Hz with electric connector of the device |
| ! | 217 | 4 | 3 | | 34331314 | Solenoid coil | | | 230 V - 50/60 Hz without electric connector of the device |
| | 218 | 4 | 1 | | 37506801 | Coil fixation | | | plastic |
| | 218 | 4 | 2 | 11/2007 | 38190909 | Hexagon nut | | | |
| | 219 | 4 | 1 | | (38900201)↓ | Electric connector of the device | | | |
| | 219 | 4 | 2 | 11/2007 | (38901901)↓ | Electric connector of the device | | 217 | complete |
| ! | 219 | 4 | 3 | | 38901902 | Electric connector of the device | | | |
| | 235 | 1 | | | 36611001 | Plug | | | steel |
| ! | 236 | 1 | | | 34703204 | Sensor | | | 100 °C |
| | 246 | 1 | | | 31400834 | Nozzle | | | |
| | 247 | 1 | | | 31400834 | Nozzle | | | |
| | 248 | 1 | 1 | | (36150101)↓ | Schrader valve | | | straight |
| | 248 | 1 | 2 | | 36150121 | Schrader valve | | | straight |
| | 249 | 1 | 1 | | (36150101)↓ | Schrader valve | | | straight |
| | 249 | 1 | 2 | | 36150121 | Schrader valve | | | straight |
| | 300 | 1 | | | 30592101 | Cover | | | |
| | 301 | 1 | | | 37299801 | Gasket | | 1 | |
| | 305 | 1 | | | 38240304 | Gasket ring | | 1 | aluminum |
| | 310 | 1 | | | 36600003 | Pipe connection | | | steel coppered brazed connection |
| | 311 | 1 | 1 | | (32050601)↓ | Blanking plate | | | aluminum |
| | 311 | 1 | 2 | | 32050613 | Blanking plate | | | aluminum |

# Parts list

| Recomended | Item | Qty. | Change stage | From year (approx.) | Article no. | Description | Contains | Contained In | Technical Information |
|---|---|---|---|---|---|---|---|---|---|
| | 312 | 1 | | | 37220003 | Gasket ring | | 1 | 1 1/4-12 - PTFE |
| | 313 | 1 | 1 | | (36521002)↓ | Screwed nipple | | | |
| | 313 | 1 | 2 | | 36521026 | Screwed nipple | | | |
| | 325 | 1 | | | 36132106 | Shut-off valve | | 326 | PS45\|DN20\|S30\|LX\|22\|1 1/4-12UNF\|AF1+3 |
| | 326 | 1 | 1 | | (37501401)↓ | Protective cap | | 325 | plastic - GRP wrench size: 20 |
| | 326 | 1 | 2 | | 36620117 | Protective cap | | 325 | plastic - GRP wrench size: 20 |
| | 327 | 1 | | | 37220003 | Gasket ring | | 1 | 1 1/4-12 - PTFE |
| | 328 | 1 | 1 | | (36521012)↓ | Screwed nipple | | | |
| | 328 | 1 | 2 | | 36521033 | Screwed nipple | | | |
| | 340 | 2 | | | 38090203 | Eye bolt | | | |
| | 345 | 1 | 2 | 07/2008 | 36611008 | Plug | | | steel |
| | 346 | 1 | | | 36611001 | Plug | | | steel |
| | 351 | 1 | 1 | | (36099901) | Pipe | | | |
| | 351 | 0 | 2 | 04/2015 | - | Article cancelled | | | |
| | 360 | 6 | | | 38030632 | Cheese-head screw | | | |
| | 361 | 1 | | | 36735906 | Flange | | | |
| | 362 | 1 | 1 | | (37244001)↓ | Gasket | | 1 | |
| | 362 | 1 | 2 | | 37244006 | Gasket | | 1 | |
| | 363 | 9 | | | 38030645 | Cheese-head screw | | | |
| | 364 | 2 | | | 38301108 | Parallel pin | | | steel with thread |
| | 365 | 2 | | | 38030642 | Cheese-head screw | | | |
| | 365 | 1 | | | 38030697 | Cheese-head screw | | | |
| | 365 | 1 | | | 38030684 | Cheese-head screw | | | |
| | 365 | 3 | | | 38030698 | Cheese-head screw | | | |

# Parts list

| Recomended | Item | Qty. | Change stage | From year (approx.) | Article no. | Description | Contains | Contained In | Technical Information |
|---|---|---|---|---|---|---|---|---|---|
| | 365 | 5 | | | 38030694 | Cheese-head screw | | | |
| | 365 | 6 | | | 38030696 | Cheese-head screw | | | |
| | 367 | 1 | | | 30515102 | Bearing cover | | 369 | |
| | 368 | 4 | 1 | | 38030603 | Cheese-head screw | | | |
| | 368 | 4 | 2 | 03/2012 | 38031283 | Cheese-head screw | | 369 | |
| | 369 | 1 | | | 34900607 | Piston rod | | | complete |
| | 370 | 1 | | | 31403206 | Piston rod | | 369 | |
| | 372 | 1 | 1 | | (32500048)↓ | Pressure spring | | 369 | |
| | 372 | 1 | 2 | 02/2013 | (32500062)↓ | Pressure spring | | 369 | |
| | 372 | 1 | 3 | 04/2014 | 32500068 | Pressure spring | | 369 | |
| | 374 | 1 | 1 | | (31404801)↓ | Piston | | 369 | capacity control |
| | 374 | 1 | 2 | 11/2007 | (31424102)↓ | Piston | | 369 | capacity control |
| | 374 | 1 | 3 | 02/2010 | 31424103 | Piston | | 369 | capacity control |
| | 375 | 1 | | | 31210401 | Sliding ring | | 1,374 | |
| | 376 | 1 | | | 37202145 | O-ring | | 1,374 | |
| | 378 | 1 | 1 | | (31300027) | Washer | | | |
| | 378 | 0 | 2 | 11/2007 | - | Article cancelled | | | |
| | 379 | 1 | 1 | | 31102805 | Sleeve | | | |
| | 379 | 0 | 2 | 11/2007 | - | Article cancelled | | | |
| | 380 | 3 | 1 | | 38031281 | Cheese-head screw | | | |
| | 380 | 0 | 2 | 11/2007 | - | Article cancelled | | | |
| | 381 | 1 | 1 | | (38015903)↓ | Hexagon head screw | | 369 | |
| | 381 | 1 | 2 | 08/2010 | 38016611 | Hexagon head screw | | 369 | |
| | 386 | 7 | | | 38030695 | Cheese-head screw | | | |
| | 394 | 2 | 1 | | (32520303) | Disc spring | | | |

# Parts list

| Recomended | Item | Qty. | Change stage | From year (approx.) | Article no. | Description | Contains | Contained In | Technical Information |
|---|---|---|---|---|---|---|---|---|---|
| | 394 | 0 | 2 | 02/2010 | - | Article cancelled | | | |
| | 395 | 2 | 1 | | (32520304) | Disc spring | | | |
| | 395 | 0 | 2 | 02/2010 | - | Article cancelled | | | |
| | 396 | 1 | 1 | | (31305101) | Spacer washer | | | |
| | 396 | 1 | 2 | 04/2007 | (31305102)↓ | Spacer washer | | | |
| | 396 | 1 | 3 | | (31305103) | Spacer washer | | | |
| | 396 | 0 | 4 | 02/2010 | - | Article cancelled | | | |
| | 397 | 1 | 1 | | (31305201) | Spacer washer | | | |
| | 397 | 1 | 2 | 04/2007 | (31305202) | Spacer washer | | | |
| | 397 | 0 | 3 | 02/2010 | - | Article cancelled | | | |
| | 398 | 1 | 1 | | (32591002) | Retaining ring with lugs | | | |
| | 398 | 0 | 2 | 02/2010 | - | Article cancelled | | | |
| | 399 | 1 | 1 | | (32591003) | Retaining ring with lugs | | | |
| | 399 | 0 | 2 | 02/2010 | - | Article cancelled | | | |
| | 400 | 1 | 1 | | (30553105) | Discharge flange cover | | | |
| | 400 | 1 | 2 | 07/2008 | 30553111 | Discharge flange cover | | | |
| | 401 | 1 | 1 | | 37299701 | Gasket | | 1 | |
| | 401 | 1 | 2 | 04/2015 | 37299702 | Gasket | | 1 | |
| ! | 500 | 1 | | | 36220406 | Oil filter | | | with o-rings |
| | 501 | 1 | 1 | | (37249402)↓ | Gasket | | 1,500,510 | |
| | 501 | 1 | 2 | 09/2008 | 37249403 | Gasket | | 1,500,510 | |
| | 502 | 1 | | | 37200329 | O-ring | | 1,500,510 | |
| | 503 | 1 | | | 37200317 | O-ring | | 1,500,510 | |
| | 504 | 1 | | | 36220106 | Oil filter | | 500 | |
| ! | 510 | 1 | 1 | | (36911901)↓ | Oil stop valve | | | complete // with tappet switch |

# Parts list

| Recomended | Item | Qty. | Change stage | From year (approx.) | Article no. | Description | Contains | Contained In | Technical Information |
|---|---|---|---|---|---|---|---|---|---|
| | 510 | 1 | 2 | 02/2020 | 36911903 | Oil stop valve | | | complete |
| | 511 | 4 | | | 38030642 | Cheese-head screw | | | |
| | 512 | 1 | | | 37235801 | Gasket | | 1,51 | |
| | 513 | 1 | 1 | | 34795201 | Pressure switch | | | |
| | 513 | 0 | 2 | 02/2020 | - | Article cancelled | | | |
| | 514 | 1 | 1 | | 38240308 | Gasket ring | | 1,513 | |
| | 514 | 0 | 2 | 02/2020 | - | Article cancelled | | | |
| | 515 | 4 | | | 38030603 | Cheese-head screw | | 510 | |
| | 550 | 1 | 1 | | (34795102) | Pressure switch | | | |
| ! | 550 | 1 | 2 | 07/2008 | 34750106 | Oil flow switch | | | complete |
| | 551 | 1 | 1 | | 37235902 | Gasket | | 1 | |
| | 551 | 2 | 2 | 07/2008 | 37202149 | O-ring | | 1,55 | |
| | 552 | 4 | 1 | | 38030699 | Cheese-head screw | | | |
| | 552 | 4 | 2 | 07/2008 | 38034301 | Cheese-head screw | | | |
| | 553 | 1 | | 03/2011 | 32496901 | Locking plate | | | |
| ! | 560 | 1 | | | 34795101 | Pressure switch | | | red |
| | 561 | 1 | | | 37235902 | Gasket | | 1,56 | |
| | 562 | 4 | | | 38030699 | Cheese-head screw | | | |
| | 563 | 1 | | | 34795202 | Pressure switch | | 560 | |
| | 564 | 1 | | | 38240308 | Gasket ring | | 1,563 | |
| | 570 | 1 | | | 34909701 | Retrofit kit filter switch | | | |
| | 600 | 1 | | | 44202400 | Coupling | | | KS800 pre-drilled |
| | 600 | 1 | | | 34202402 | Coupling | | | KS800 |
| | 600 | 1 | | | 34202401 | Coupling | | | KS800 |
| | 650 | 1 | 1 | 04/2007 | 30650604 | Kit discharge flange and rotors | | | serial number required |

# Parts list

| Recomended | Item | Qty. | Change stage | From year (approx.) | Article no. | Description | Contains | Contained In | Technical Information |
|---|---|---|---|---|---|---|---|---|---|
| | 650 | 0 | 2 | 02/2010 | - | Article cancelled | | | |
| | 700 | 1 | | | 30061214 | Coupling housing | | | GS7120 |
| | 700 | 1 | | | 30061216 | Coupling housing | | | GS7140 |
| | 701 | 4 | | | 38010958 | Hexagon head screw | | 700 | |
| | 702 | 4 | | | 38200157 | Washer | | 700 | steel galvanized |
| | 703 | 1 | | | 32490912 | Cover plate | | 700 | |
| | 703 | 2 | | | 32490922 | Cover plate | | 700 | |
| | 704 | | | | 38020252 | Self-locking screw | | 700 | |
| | 760 | 1 | | | 36182204 | Sight glass | | | |
| | 800 | 2 | 2 | 07/2008 | 34490201 | Cable | | | |
| | 801 | 1 | 2 | 07/2008 | 34490002 | Cable | | | |
| | 1010 | 1 | | | 91511501 | Refrigeration compressor oil | | | BSE170 |
| | 1010 | 1 | | | 91511502 | Refrigeration compressor oil | | | BSE170 |
| | 1010 | 1 | | | 91511504 | Refrigeration compressor oil | | | BSE170 |
| | 1010 | 1 | | | 91511505 | Refrigeration compressor oil | | | BSE170 |
| | 1020 | 1 | | | 91511705 | Refrigeration compressor oil | | | B150SH |
| | 1020 | 1 | | | 91511706 | Refrigeration compressor oil | | | B150SH |
| | 1020 | 1 | | | 91511707 | Refrigeration compressor oil | | | B150SH |
| | 1030 | 1 | | | 91510901 | Refrigeration compressor oil | | | B100 |
| | 1030 | 1 | | | 91510904 | Refrigeration compressor oil | | | B100 |

08.10.2025

**Subject to change**

**BITZER Kühlmaschinenbau GmbH**
Peter-Schaufler-Platz 1 // 71065 Sindelfingen // Germany
Tel +49 7031 932-0 // Fax +49 7031 932-147
bitzer@bitzer.de // www.bitzer.de

**BITZER Refrigeration Technology (China) Co., Ltd.**
No. 20, Fourth Jing Hai Road
Beijing Economic-Technological Development Area
Beijing 101111, China
Tel :+86 (010)67819000//Fax :+86 (010)67819002
info@bitzer.cn // www.bitzer.cn

**比泽尔制冷技术（中国）有限公司**
地址：北京经济技术开发区经海四路 20 号//邮编：101111
电话:+86 (010)67819000//传真:+86 (010)67819002
info@bitzer.cn // www.bitzer.cn