ENGINEERING
TOMORROW

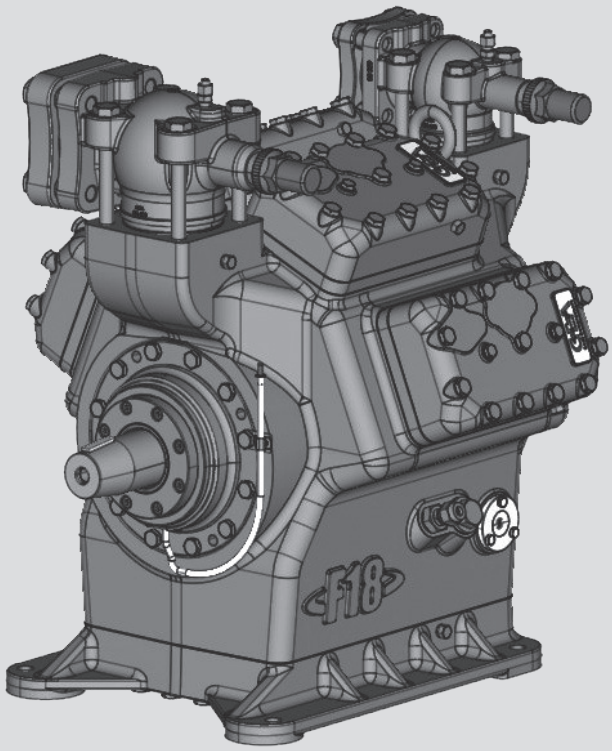

BOCK® F18 / F76 / F88

Service guide

F18/2735	FX18/2735	F18/3235	FX18/3235
F76/1570	FX76/1570	F76/2050	FX76/2050
F76/1800	FX76/1800	F76/2425	FX76/2425
F88/2735	FX88/2735	F88/3235	FX88/3235

Translation of the original instructions

AX452438944357en-000301

About these instructions

Read these instructions before assembly and before using the compressor. This will avoid misunderstandings and prevent damage. Improper assembly and use of the compressor can result in serious or fatal injury.
Observe the safety instructions contained in these instructions.

Liability and warranty

Manufacturer's liability and warranty are excluded if

- Alterations and functional modifications have been carried out
- No original replacement parts have been used

Contents

		Page
1	Safety	3
2	Fault diagnosis	4
3	Disassembly of the compressor	8
4	Checking the compressor parts	21
5	Assembly of compressor	23

© Danfoss | Climate Solutions | 2023.09

1 I Safety

Safety instructions

Target group of these instructions

- Work on the compressor may only be carried out by persons whose technical training, skills and experience along with their knowledge of pertinent regulations and documentation means that they are capable of assessing the work to be carried out and detecting any possible dangers
- Specialist can mean a refrigeration technician for example. Note that electrical work may only be carried out by a qualified electrician. Alternatively, on a country-specific basis, persons who have undergone electrotechnical instruction and who have proof of their qualification are also permitted to carry out the work.

Identification of safety instructions

	**DANGER!**	**Indicates a dangerous situation which, if not avoided, will cause immediate fatal or serious injury.**
	**DANGER!**	**Indicates a dangerous situation which by electrical current, if not avoided, will cause immediate fatal or serious injury.**
	**WARNING!**	**Indicates a dangerous situation which, if not avoided, may cause fatal or serious injury.**
	**CAUTION!**	**Indicates a dangerous situation which, if not avoided, may cause fairly severe or minor injury.**
	**ATTENTION!**	**Indicates a situation which, if not avoided, may cause property damage.**
	**INFO!**	**Important information / tips on simplifying work.**

General safety instructions



DANGER! Risk of electric shock

- **Before you carry out any repair work, disconnect the compressor from the electricity network.**
- **Turn the main switch to "0" (OFF).**
- **Secure the main switch against an unauthorised restart.**



WARNING!

- **Refrigerating compressors are pressurised machines and therefore require particular caution and care in handling.**
- **Risk of burns! Depending on the operating conditions, surface temperatures of over 60 °C on the pressure side or below 0 °C on the suction side can be reached.**
- **The maximum permissible overpressure must not be exceeded, even for testing purposes.**

2 I Fault diagnosis

Fault diagnosis

In case of malfunctions during compressor operation we recommend to prepare a measurement record for aiding the fault search:

- Pressure measurement: Discharge side, suction side, oil pressure
- Temperature measurement: Compressor housing, discharge end temperature, suction gas overheating

According to the expected cause of the fault it may be necessary to check the electrical systems for faults in the control.
In order to localize the causes of operating malfunctions as easy as possible we have compiled the following table with suggestions for remedying compressor malfunctions. Further information is available on our failure analysis slide that can be downloaded on www.bock.de.

Function faults - Symptoms

Function faults arising most frequently and their symptoms are:

- Compressor stoppage, compressor cutoff
  - Compressor does not start
  - Compressor starts and then stops again
- Refrigerant performance too low
- Temperature of the compressor too high
- Oil problems
- Abnormal compressor running noise

Compressor stand still

Compressor does not start

Problem	Possible cause	Remedy
Control circuit is interrupted	Main - or control fuse is switched off or tripped	Replace fuse Determine and remove the cause
	Cut off through: - Low pressure switch - High pressure switch - Heat protection thermostat - Control thermostat - Other safety elements	Locate the interruption in the circuit and remove
Malfunction of electromagnetic clutch	- see also p. 16 „Malfunction of electromagnetic clutch“	Checking

Compressor cutoff

Compressor starts and stops again

Problem	Possible cause	Remedy
Low pressure switches off	**Suction pressure too low:** - Check the setting of the low pressure switch	- Adjust the switching points or replace switch
	- Suction valve of the compressor closed	- Open suction valve
	- Capacity of compressor too large	- Check operating conditions
	- Refrigerant deficiency	- Leak test / add refrigerant
	- Filter / dryer in the liquid line blocked	- Replace filter / dryer
	- Expansion valve not functioning properly	- Check the setting of the expansion valve
	- Solenoid valve on the liquid line not opening	- Check the control / function

© Danfoss | Climate Solutions | 2023.09

2 I Fault diagnosis

Problem	Possible cause	Remedy
Cutoff through high pressure switch	**Condensing pressure too high:** - Check the setting of the high-pressure switch	- Adjust the switching points or replace switch
	- Pressure valve of the compressor closed	- Open the pressure valve
	- Condenser fan does not work	- Check the control / replace motor
	- Condenser fan is dirty	- Cleaning of condenser
	- Excessive refrigerant filling	- Extract refrigerant to normal filling
	- Non-condensible gases in refrigerant	- Extract refrigerant and evacuate the refrigeration plant / refill refrigerant
Cutoff through heat protection thermostat (accessory)	**Discharge end temperature is too high** - Operating limits of compressor exceeded	- Adapt the operating conditions to the operating range
	- Suction gas overheating	- Check expansion valve / check insulation on the suction side
	- Refrigerant of the condenser insufficient	- Check fan motors / Clean the condenser
	- Valve plate damage	- Replace valve plate
	- Internal safety valve has opened	- Replace safety valve -> Check compressor and refrigeration plant Determine and remove the cause for the inadmissible high pressure in the high-pressure side
Cutoff through control thermostat	Temperature over / below the desired range	Check operating points

Refrigerant performance too low

Problem	Possible cause	Remedy
Suction pressure too high	- Evaporator iced up	- Remove the cause
	- Expansion valve not functioning properly	- Check expansion valve setting; replace valve if necessary
	- Lack of compressor capacity	- Check the function of the compressor by evacuating to vacuum. Check function of capacity regulator (accessory)
	- Shortage of refrigerant	- Run leakage test / refill refrigerant
Suction pressure too low	- See „Cutoff through low-pressure switch“	- Check
High-pressure too high	- See „Cutoff through high-pressure switch“	- Check
High-pressure too low	- Condenser being cooled to much	- Adjust the control of condenser cooling
	- Lack of compressor capacity	- Check compressor / Check the functioning of capacity regulator
	- Pressure fins of valve plate leaking	- Replace valve plate
	- By-pass between suction and discharge side	- Localize leak between the discharge and suction side and repair it

Compressor temperature too high

Problem	Possible cause	Remedy
Suction gas temperature too high	- Suction gas overheating	- Adjust expansion valve Insulate the gas suction line
	- Too little refrigerant filling	- Establish the operating filling (see Operating Instruction for the refrigeration plant) Localize leak
	- Liquid filter blocked	- Clean or replace filter / dryer
	- Shortage of refrigerant	- Run leakage test / refill refrigerant
Discharge pipe temperature too high	- Suction gas temperature too high (Condensing pressure too high)	- Adjust expansion valve Insulate the gas suction line - see „Cutoff through high-pressure switch“
	- Operating limits of compressor exceeded	- see „Cutoff through heat-protection thermostat“
	- Cooling insufficient	- Check refrigerant filling - Adjust expansion valve
	- Short circuit between the discharge and the suction side of the compressor	- Check gaskets on valve plate / change
	- Valve plate damage	- Replace valve plate
	- Internal safety valve has opened	- Replace safety valve (see chapter disassembly / assembly of the compressor)

Oil problems

Problem	Possible cause	Remedy
Oil pressure too low	- Refrigerant in oil	- see „Oil foams“
	- Too little oil in compressor	- Add oil and search for the cause of oil loss
	- Oil filter dirty / blocked	- Clean / replace oil filter Change oil
Oil foams during start-up phase	- Liquid refrigerant has moved into the oil sump	- Check the laying of pipes - Installation of the check valve in the discharge line - Installation of the solenoid valve in the liquid line - Check the control
Oil foams during operating	- Expansion valve not functioning	- Adjust / replace expansion valve
Oil level decreases	- During start-up, a portion of the oil is carried to the refrigeration plant with the refrigerant	- Refrigerant and oil get mixed. After some time the oil level should stabilize. Add oil, if necessary.
	- Refrigerant in oil	- see „Oil foams during start-up phase“
	- Piston rings worn	- Replace piston rings
	- Suction / discharge fins of the valve plate leaking	- Replace valve plate

© Danfoss | Climate Solutions | 2023.09

Abnormal running noises from compressor

Problem	Possible cause	Remedy
Fixation of compressor is loose	- Screwed connections have become loose - Securing elements for screwed connections missing	- Tighten the screwed connections and secure them anew
	- Silent blocks defective	- Replace silent blocks
Liquid shock	- Liquid refrigerant reaching the compressor	- Adjust / check expansion valve Check refrigerant filling Check evaporator fan - Icing-up of the evaporator
	- Oil shocks because of too much oil	- Check oil level Check the dimensioning of pipes (gas velocity) Replace worn piston rings
Capacity regulator (accessory)	- Switching on and off constantly / oscillating	- Check the control
	- Defective	- Replace capacity regulator valve
V belt drive, increased noise generation	- Belts vibrating excessively	- Check belt tension Use tensioning roller / guidance roller
	- Incorrect alignment of compressor and motor	- Check alignment and adjust anew

3 I Disassembly of the compressor

Disassembly and assembly of the compressor

WARNING! Before starting any work on the compressor:

- **Switch of the compressor and secure it against switching on again.**
- **Relieve the compressor from system pressure**
- **Prevent air from infiltrating the system**
- **Move and transport the compressor using an appropriate hoist**

After the work is finished:

- **Connect the safety switch and check its function**
- **Evacuate the compressor**
- **Before commissioning, check whether all the components installed by the user have been mounted expertly and are connected pressure-tight to the compressor**
- **Open the pressure and suction shut-off valves**
- **Set off the switching-on lock**

Important Notes

INFO!

- **Use only new gaskets for assembly.**
- **The following illustrations show a F18 compressor in standard design. Components of other designs can differ from these illustrations. However, the procedure for disassembly and assembly of the compressor is identical.**

© Danfoss | Climate Solutions | 2023.09

3 I Disassembly of the compressor

Removal of the compressor from the refrigerant system

Removal of the compressor from the system, shut-off valves remaining on the compressor

- Extract the refrigerant from the system into a container that is approved for this refrigerant
- Evacuate the systems including the compressor
- Cut off the vacuum, humid air should not get into the system
- Close the shut-off valves on the suction and discharge side; then remove the compressor
- Close the suction and discharge line connection points on the system with plug
- Relieve the pressure before dismounting the compressor

Removal of the compressor from the system, shut-off valves for compressor remaining at the system

- Close shut-off valves on the suction and discharge side
- Extract the refrigerant from the compressor into a container that is approved for this refrigerant
- Evacuate the compressor
- Cut off the vacuum
- Remove the compressor from the system
- Close the suction and discharge shut-off ports on the compressor with plugs

Disassembly of compressor

The disassembly of the compressor is explained in separate steps on the following pages. The indicated parts list positions refer to the spare parts lists, repair set lists, special accessories part lists and are available online at www.bock.de.
You can find the exploded drawing at the end of the maintenance manual.

Preparation: Necessary tools

Pos.	Tool	Size
1	Oil collection container	> 10 Liter
2	Spanner	SW 10, 13, 15, 17, 19, 24, 27
3	Allen key	6 mm, 10 mm
4	Needle-nosed pliers	

1 Remove all shut-off valves

Position in parts list	Parts list position: **2060, 2070,** 355, 410 / 220, 410
	Tools: Spanner SW 24
	Working course
	- The compressor has to be depressurized
F18, F76: 355, 410 **F88:** 220, 410	**- Unscrew the fixing screws of shut-off valves**
2060, 2070 210, 400	**- Remove the shut-off valves and the seals**
230, 400	**- Remove the suction filter and the seal**

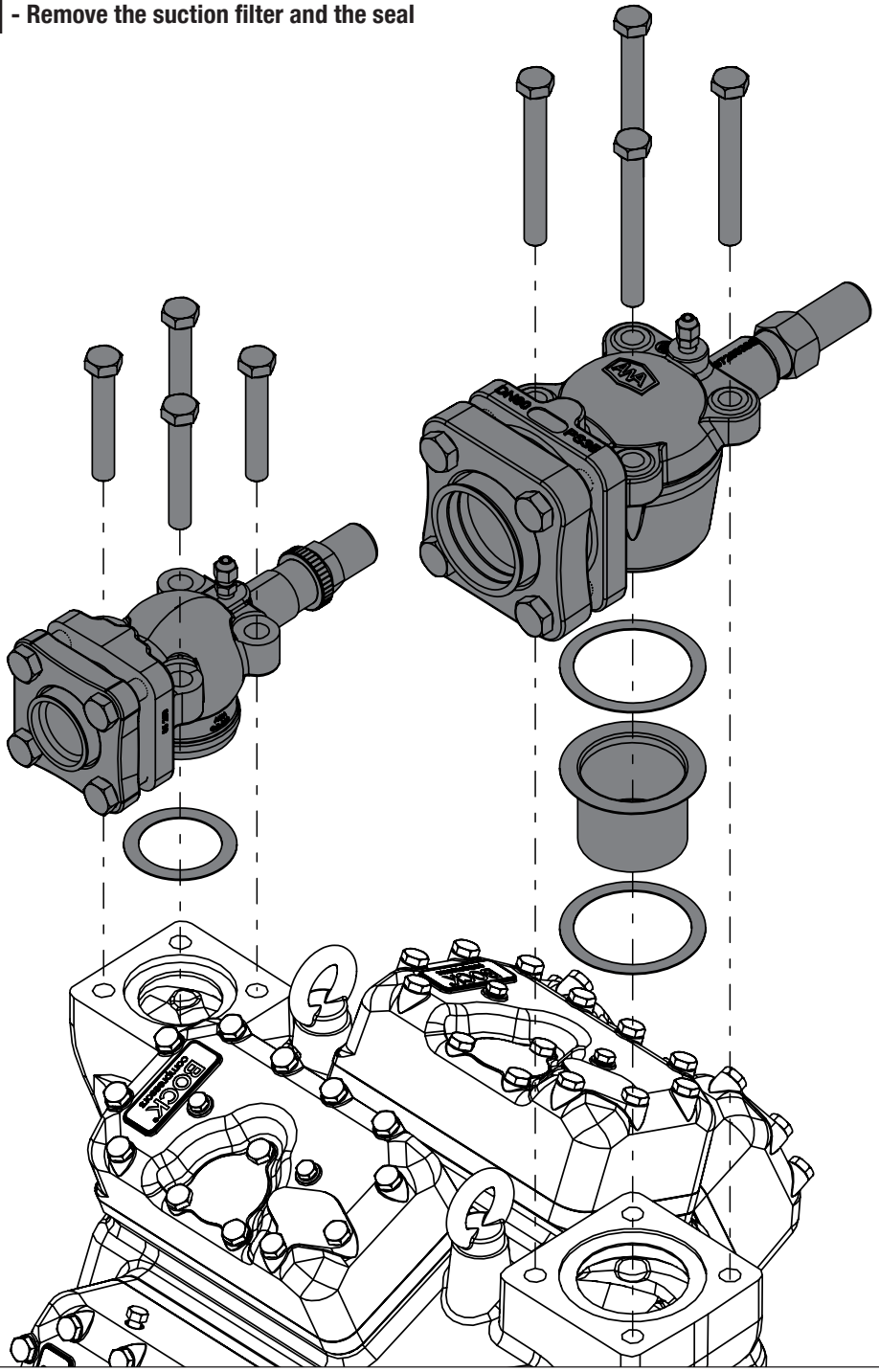

© Danfoss | Climate Solutions | 2023.09

2 Remove oil filter

Position in parts list	Parts list position: **2220,** 507 / 517
	Tools: Oil collection container > 10 Liter, Spanner SW 19, Allen key 10 mm
	Working course
	- Position a suitable container to collect the oil underneath
F18, F76: 505 **F88:** 517	**- Unscrew the plug screw and drain the oil**
500	**- Remove the gasket**
490	**- Unscrew the oil filter**

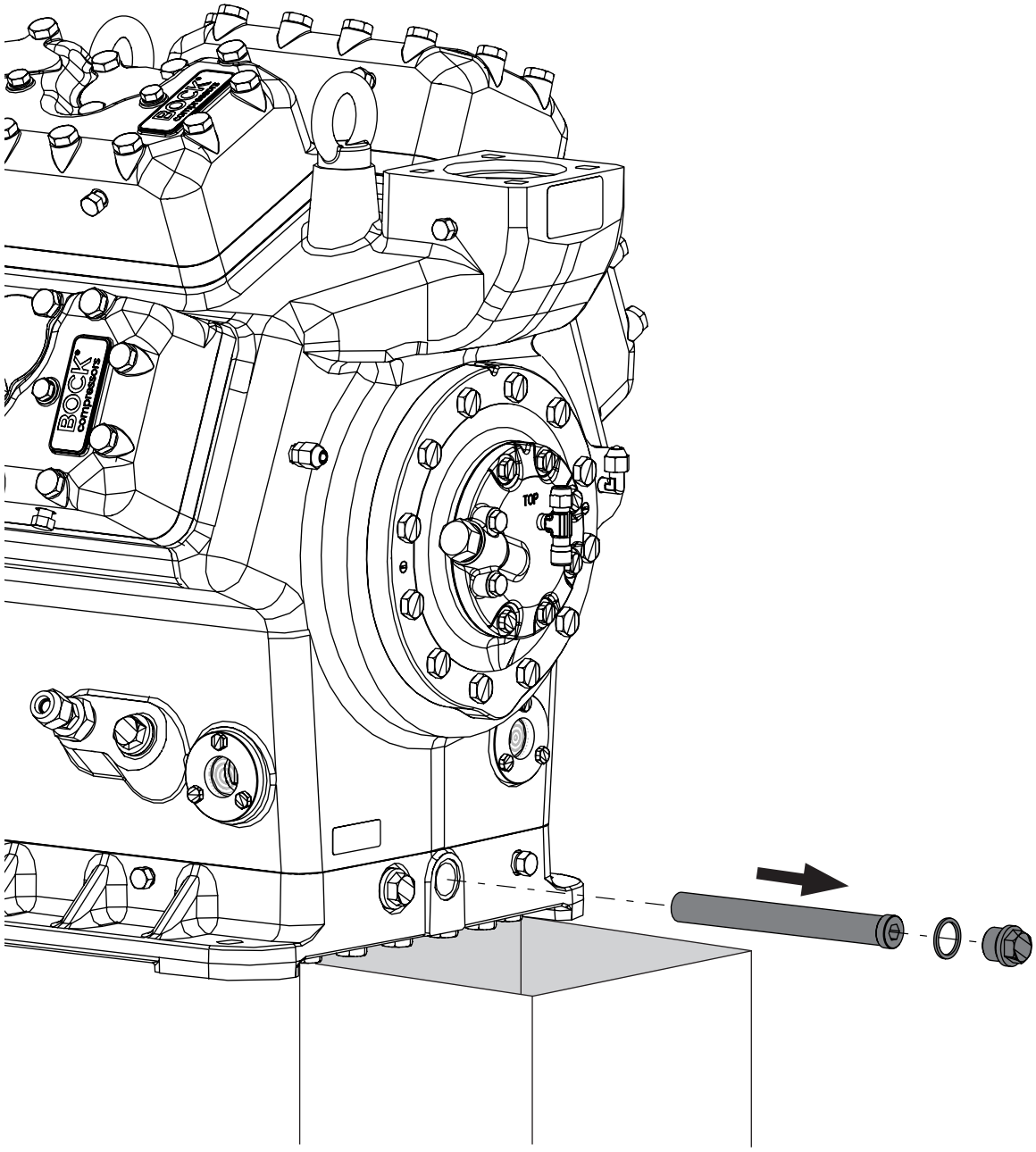

3 Remove cylinder cover and valve plates

Position in parts list	Parts list position: **2000, 2005**
	Tools: Spanner SW 13, SW 17
	Working course

ATTENTION! **The order for removal of the screws must be observed to avoid damage to the valve plate, see numbering. A possible existin capacity regulator can remain mounted on the cylinder cover!**

2005
50, 70

- **Losen screws at the cylinder cover and unscrew**
- **Remove cylinder cover with seals and valve plate**

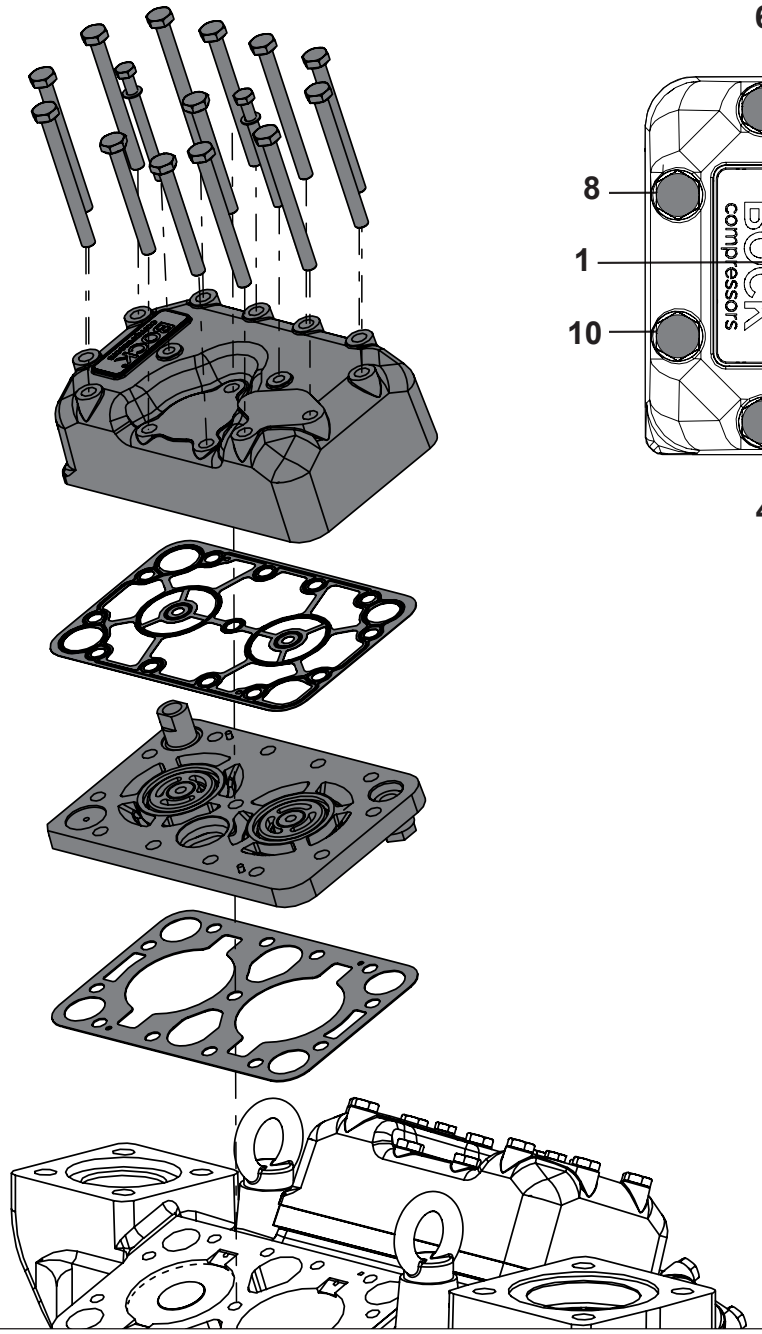

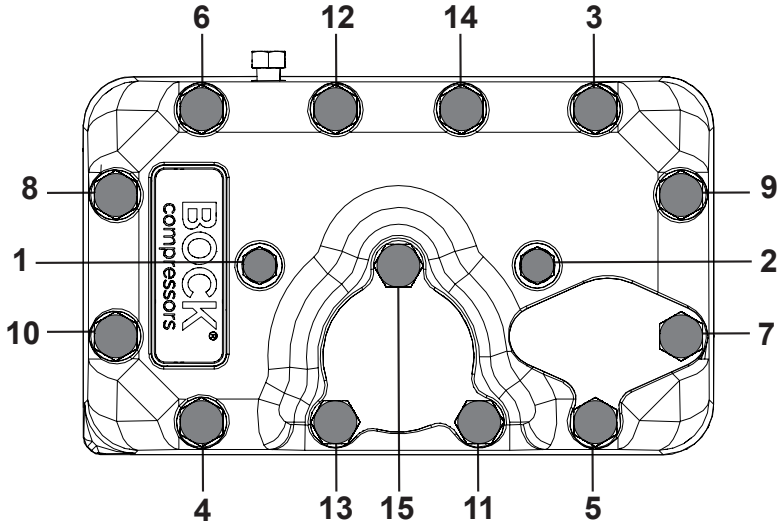

1,2: **M8x90, Sealing ring 14x8x1**
11, 13, 15: **M10x90**
Other: **M10x110**

© Danfoss | Climate Solutions | 2023.09

4 Remove shaft seal

Position in parts list	Parts list position: **2010**
	Tools: Allen key 6 mm
	Working course
	- Place the oil collection container under the shaft seal area
755	**- Unscrew the screws**
	CAUTION! Risk of injury! **The shaft seal cover is under spring tension! It may jump out by itself.**
790, 882, 880, 830 **F88:** 850	**- Remove the feather key / woodruff key, the shaft seal cover with the floating ring, the guide ring, the O-ring and the spring**

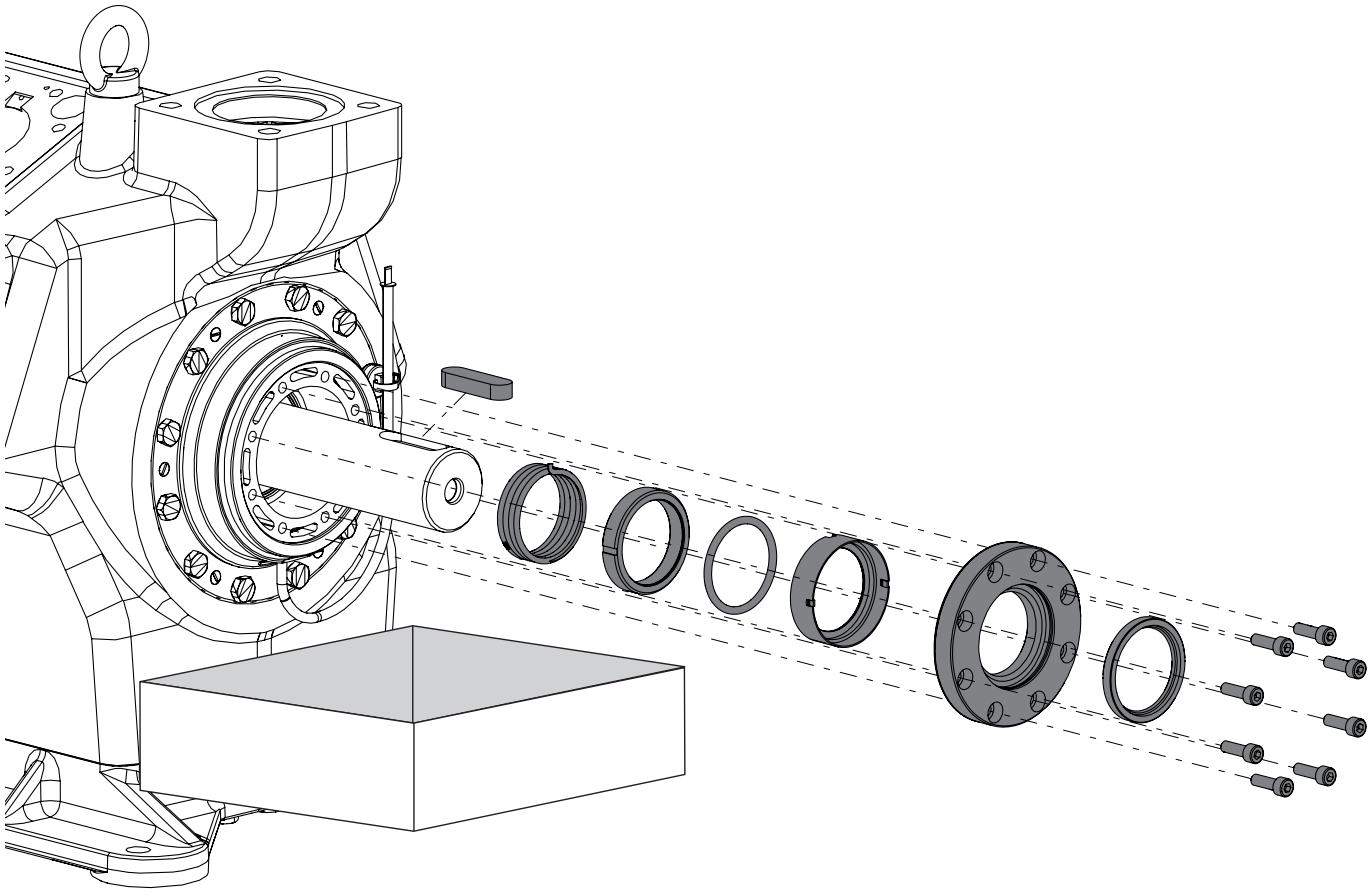

5 Remove baseplate

Position in parts list	
	Parts list position: 20, 30, 40
	Tools: Spanner SW 19
	Working course
	- Place the compressor into the oil collection pan and turn it sideways
40	**- Unscrew the screws from the baseplate**
20, 30	**- Remove the baseplate and the seal**

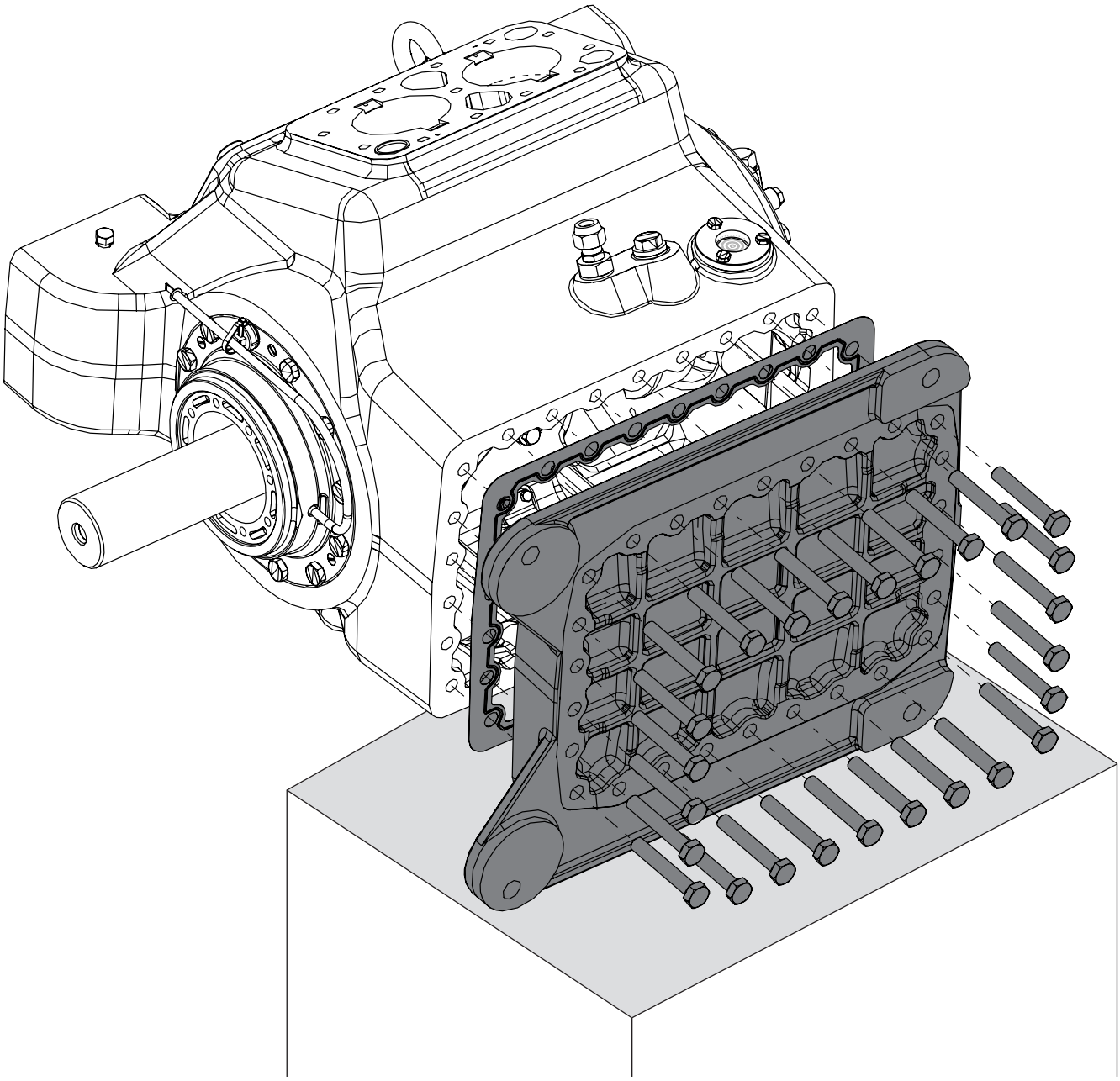

© Danfoss | Climate Solutions | 2023.09

6 Disassembly connecting rods from the crankshaft

Position in parts list	
	Parts list position: **2040, 2100**
	Tools: Spanner SW 13
	Working course
	INFO! In order to prevent any mix-up during reassembly, mark the connecting rods and caps belonging together clearly and in a wipe-resistant fashion!
2100	**- Unscrew the hexagon head screws from the connecting rod cap**
2100	**- Mark the connecting rod cap and remove it**
2040	**- Push the piston and connecting rod upwards as far as it goes**
300, 295, 290	**- Remove the piston rings**
	- The same procedure should be applied for the remaining connecting rods

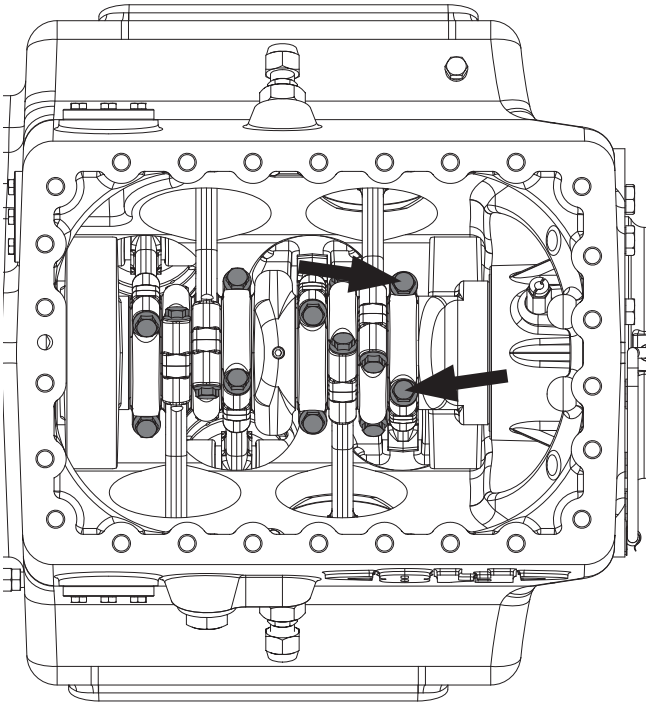

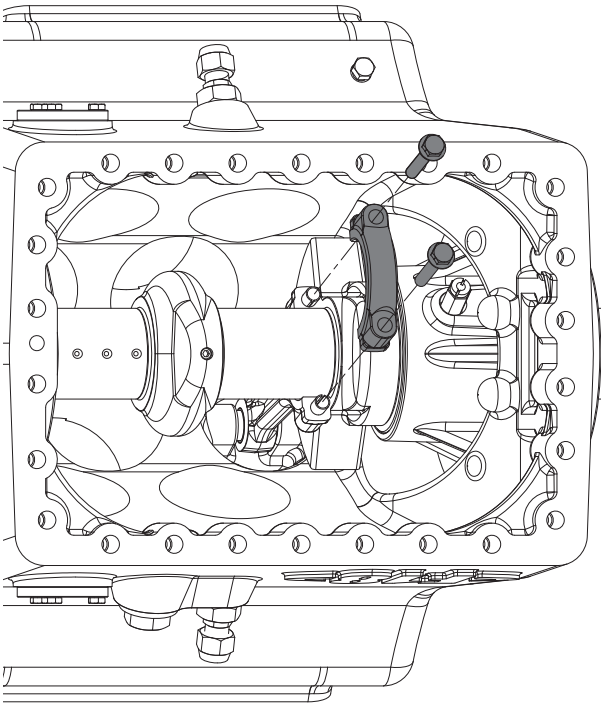

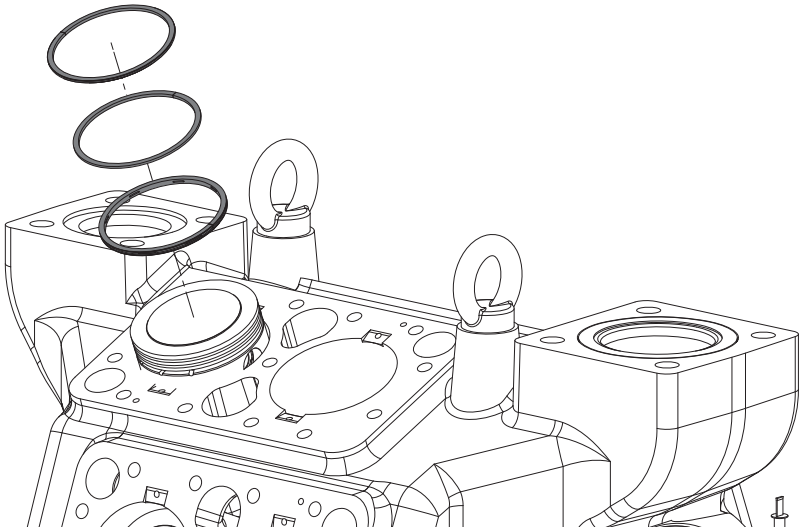

7 Remove front bearing flange

Position in parts list	
	Parts list position: **2140**
	Tools: Spanner SW 17
	Working course
750	**- Losen the screw at the front bearing flange and unscrew**
730, 745 **F76:** 735, 736 **F88:** 2250	**- Remove the front bearing flange, the seal and the thrust washer**

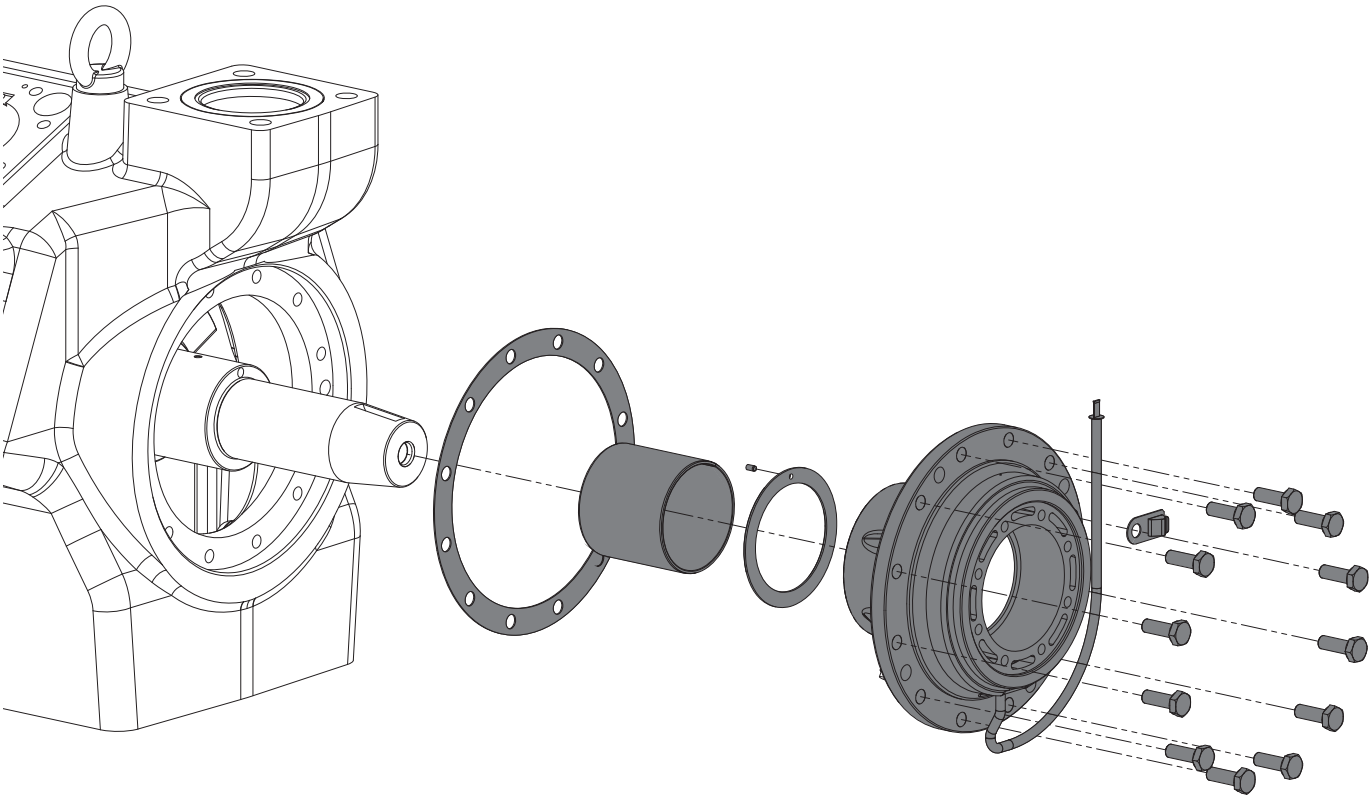

© Danfoss | Climate Solutions | 2023.09

8 Remove crankshaft

Position in parts list	Parts list position: **2050**
	Tools: -
	Working course
780, 790	**- Pull out the crankshaft carefully in direction of the front bearing flange, observe woodruff key / feather key**

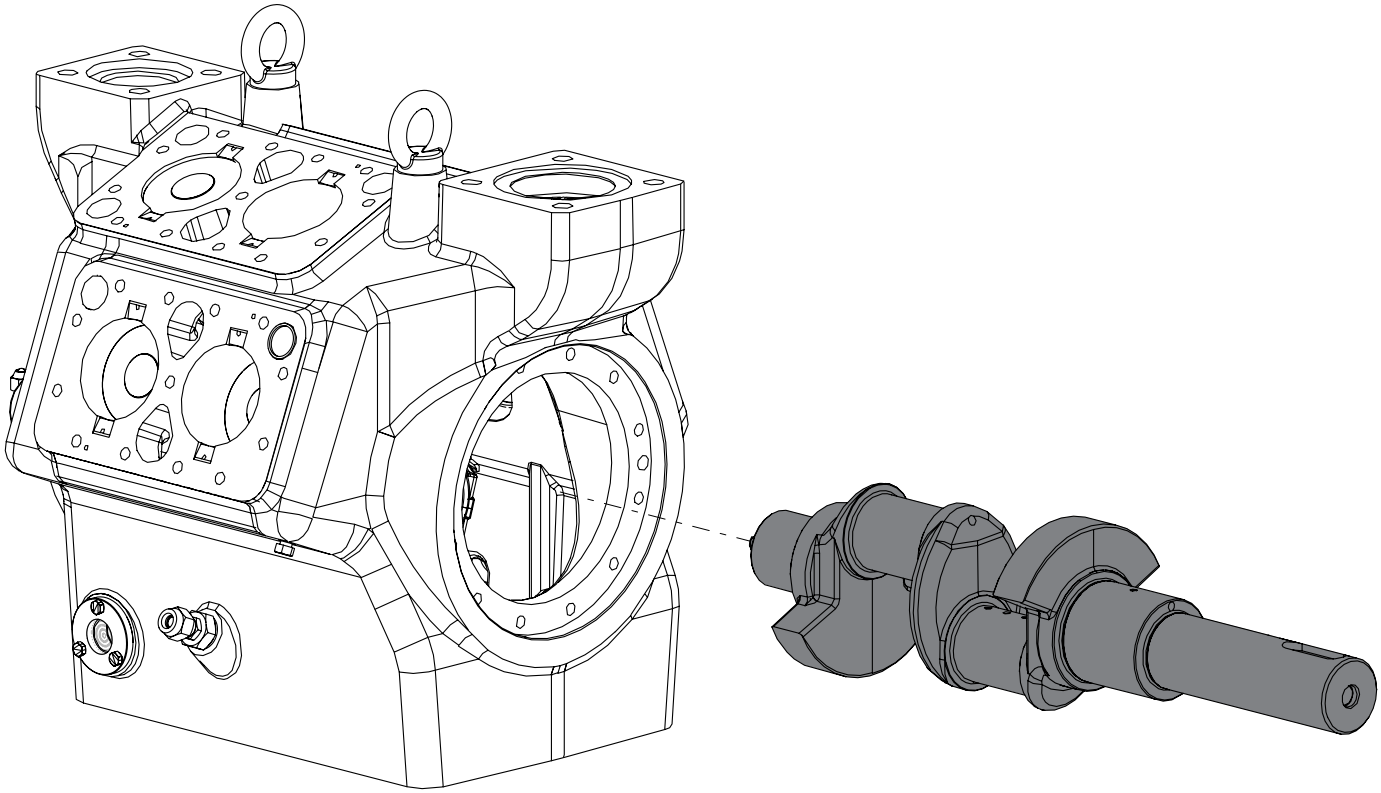

9 Remove oil pump and rear bearing flange

Position in parts list	Parts list position: **2020, 2110,** 760
	Tools: Spanner SW 13, SW 17
	Working course
480, 485,	**- Losen the screw at the oil pump and unscrew**
460, 470	**- Remove the oil pump and seal**
760	**- Unscrew the screws from the rear bearing flange**
740, 765	**- Take off rear bearing flange and seal**

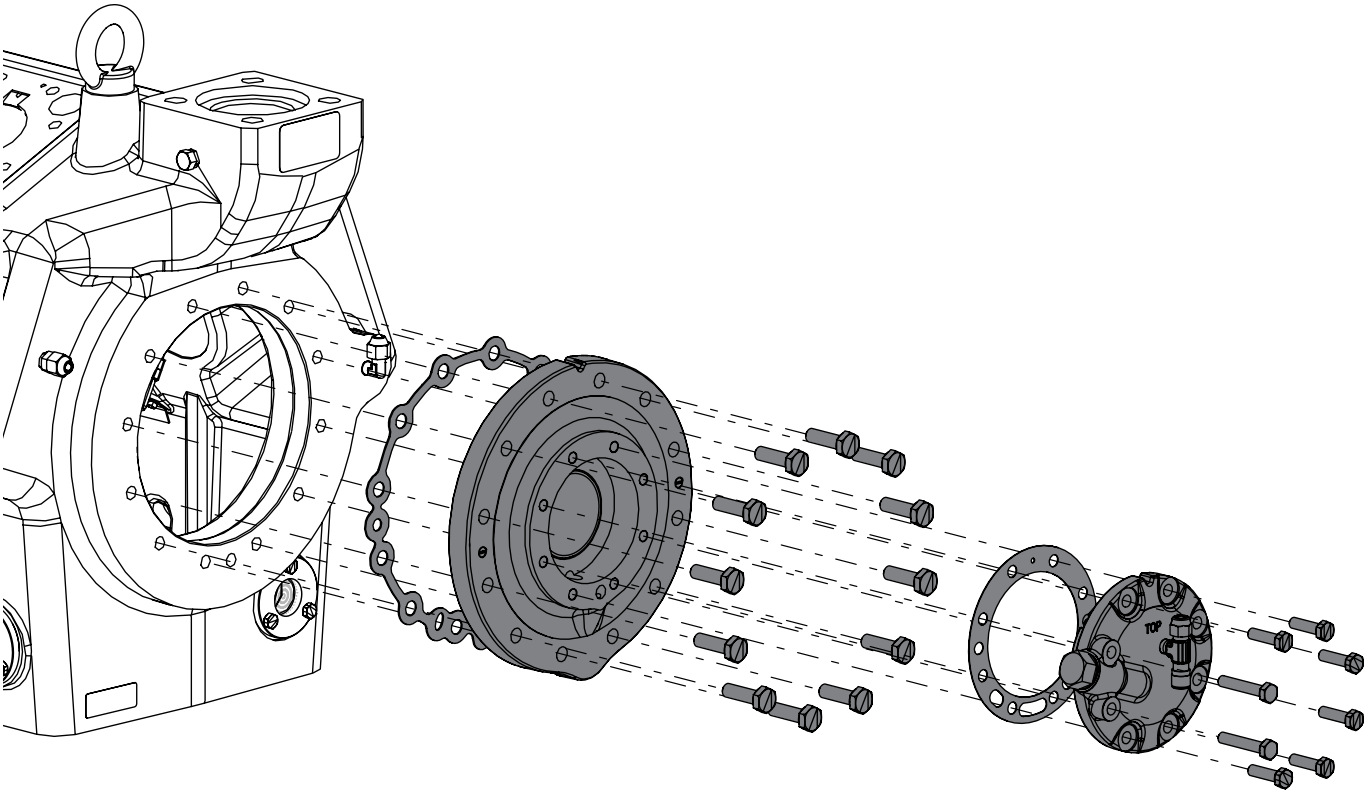

© Danfoss | Climate Solutions | 2023.09

10 Remove pistons and connecting rods

Position in parts list	Parts list position: **2040**
	Tools: Needle-nosed pliers
	Working course
	- Mark corresponding pistons of cylinder bore
2040	**- Remove the piston / connecting rod in direction of baseplate**
280	**- Remove circlips of the piston pins with needle-nosed pliers**
270, 2030	**- Press the piston pins out of the pistons and remove pistons**
2100	**- In order to prevent mix-ups, fasten the connecting rod caps to the connecting rods again**

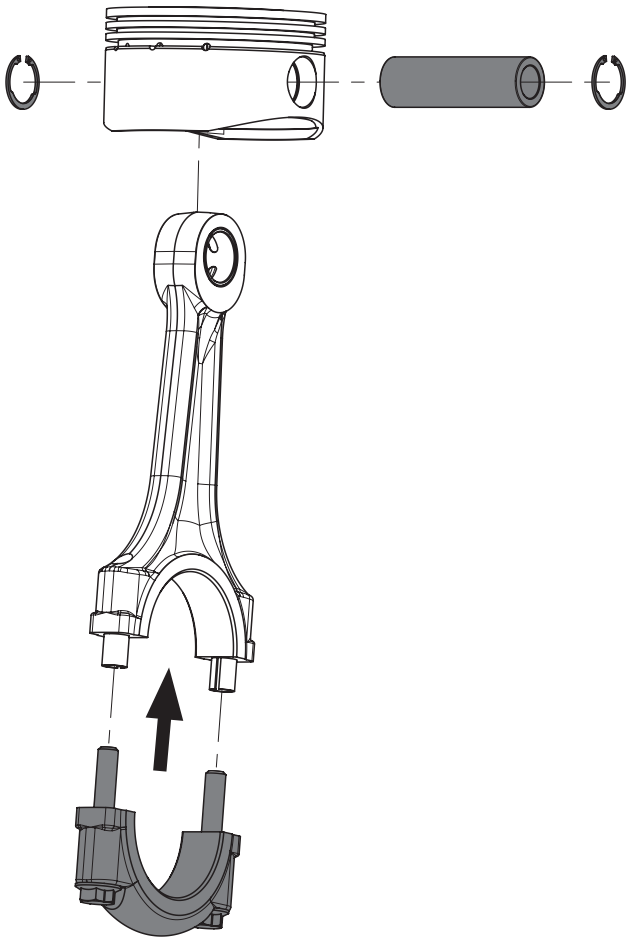

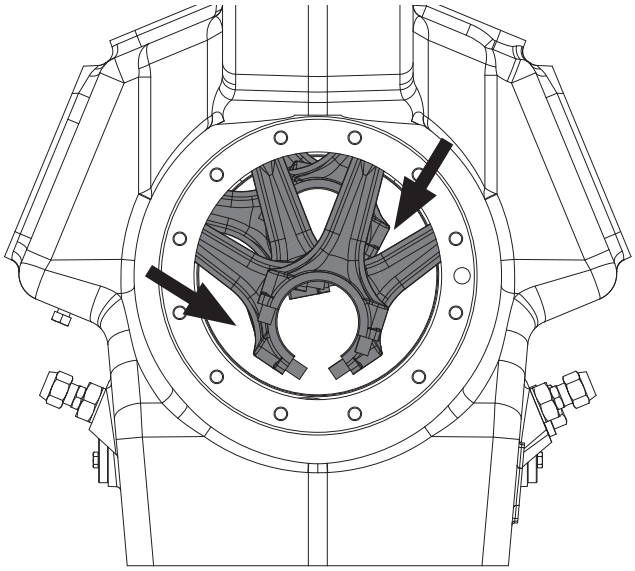

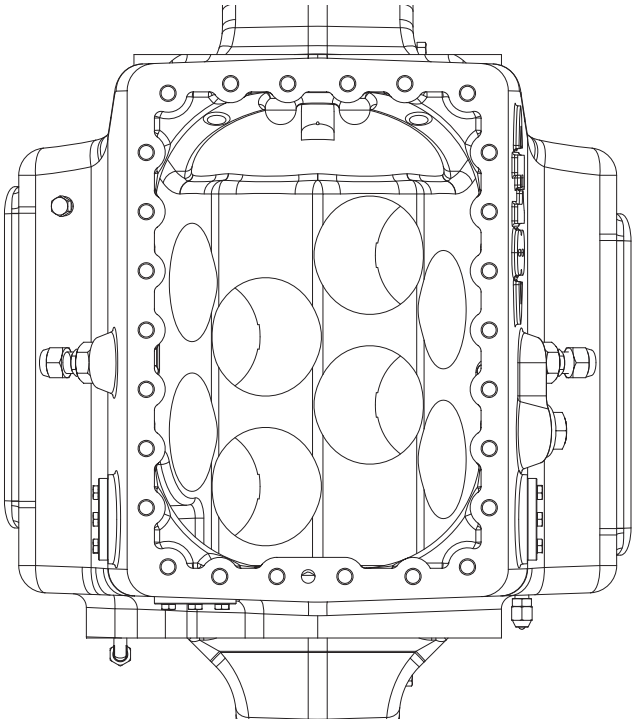

11 Remove remaining parts

Position in parts list	Parts list position: -
	Tools: Spanner SW 10, 13, 15, 27
	Working course
580	**- Losen screws on sight glass and unscrew**
570, 590	**- Take off sight glass and remove O-ring**
F18, F88: 520, 530 **F76:** 520	**- Remove the 1/8“ NPTF locking screws**
F18: 510, 515 **F76, F88:** 510, 500	**- Remove the M33 x 2 locking screws and the gasket**
F18, F76: 540 **F88:** 540, 550, 560	**- Unscrew the srew in angle piece with union nut and sealing cap**
F18, F76: 545 **F88:** 545, 546, 547	**- Unscrew screw-in fitting with union nut and sealing cap**
531, 534, 500	**- Remove screw-in fitting, union nut, sealing cap, locking screw and gasket**
600	**- Unscrew transport eyelet**

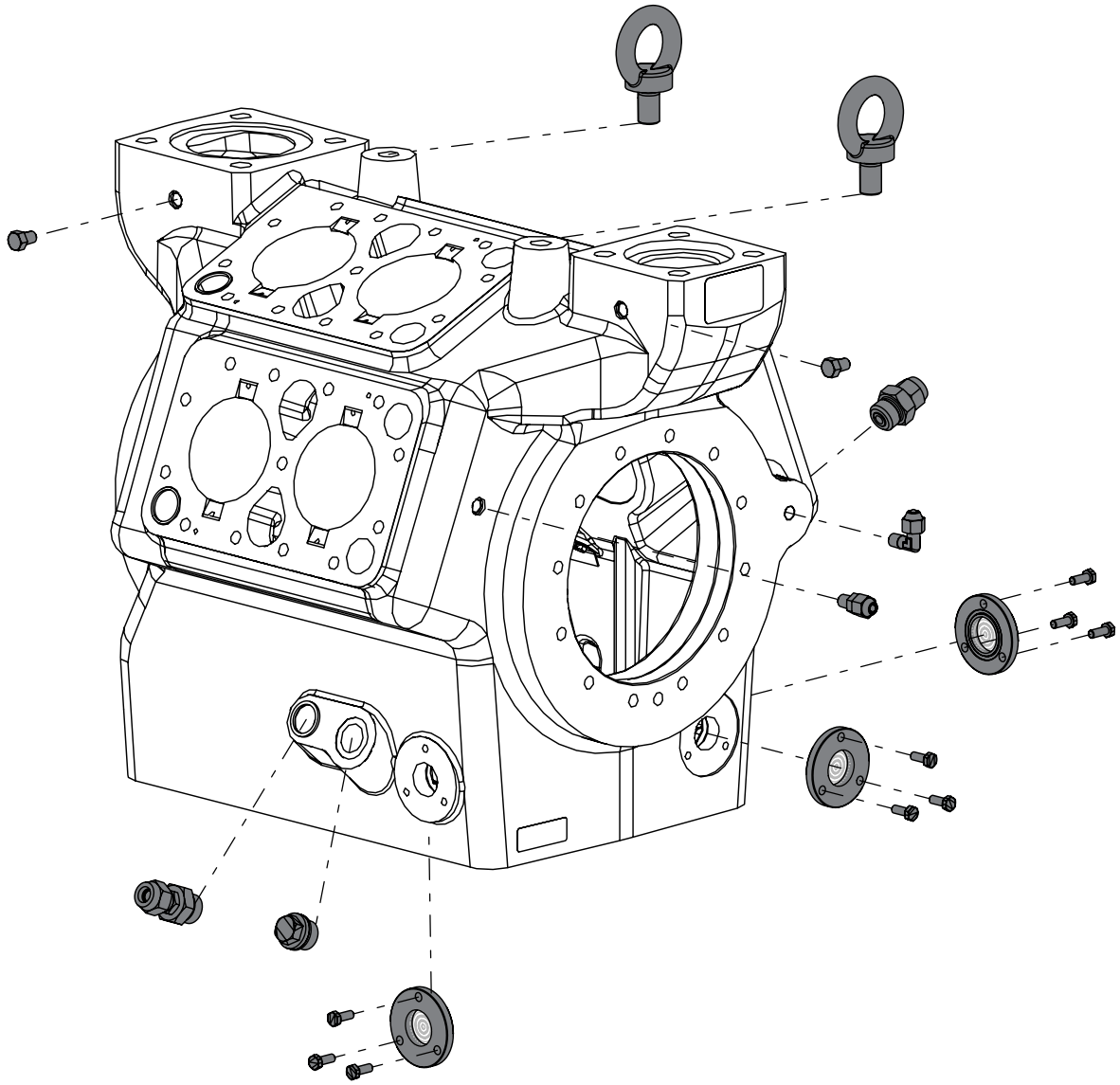

© Danfoss | Climate Solutions | 2023.09

4 I Checking the compressor parts

Checking compressor parts for damages and wear

- **Cylinder liners**

  The cylinder liners should not have any visible damages in the piston movement area.
  If there is fluting, the casing should be replaced.

- **Crankshaft**

  The bearing surfaces should not have any damages. The oil channels should be clean so that an unhindered oil flow is ensured.

CAUTION! Remaining oil can cause eye injury!
When compressed air is used, remaining oil can splash out of the oil channels.
Wear protective googles.

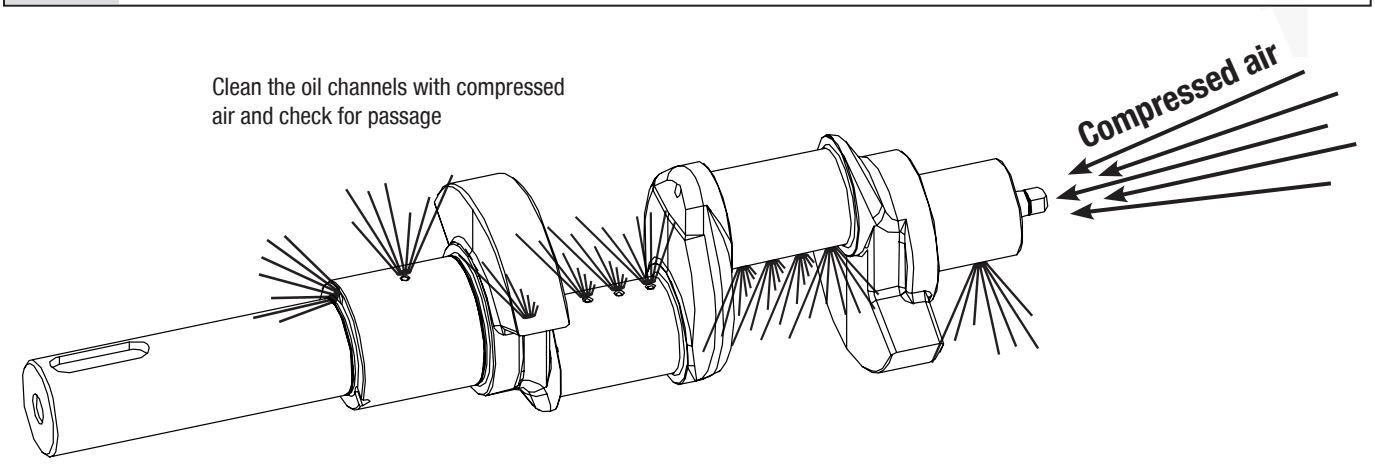

- **Pistons**

  There should be no visible damages on the piston head and the piston walls. The grooves for the piston rings must be clean and undamaged. Check the condition of the piston rings for wear, fractures and other irregularities.

- **Connecting rods**

  There should be no damages on bearing surfaces.
  The connecting rod shank must be straight.

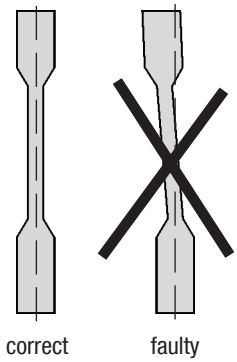

4 I Checking the compressor parts

- **Valve plates**

  Suction and pressure lamella must be undamaged and un-deformed. The sealing surfaces must be clean and undamaged, between lamellas and valve plates there should not be any pollution (dirt, swarfs etc.). In case of a damage the valve plate must be replaced completely. Single lamella are not available.

- **Oil pump**

  It must be possible to turn the oil pump by hand (turning to the left and to the right).
  In the removed conditioning the reversing device of the oil pump must switch over audibly.

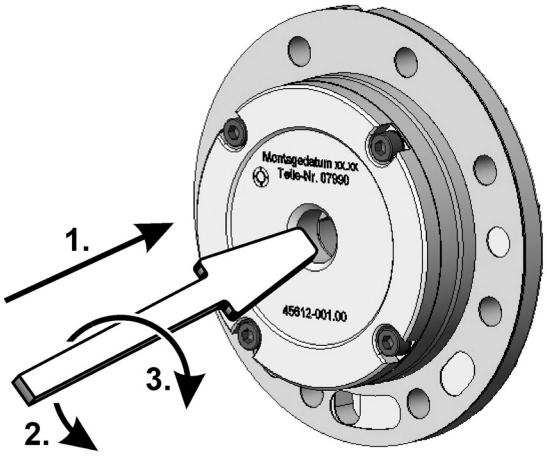

- **Oil filter / suction filter**

  The filter screen must be in an undamaged condition. Dirt and residues have to be removed.
  If necessary, the filter have to be cleanded with compressed air or replaced with new ones.

In case of larger compressor damages which necessitate a complete disassembly of the compressor, we recommend in principle the replacement of the valve plates, the piston rings and all seals. Thus, concealed defects of parts which have been in operation may be prevented.

© Danfoss | Climate Solutions | 2023.09

5 I Assembly of compressor

Assembly of compressor

The assembly of the compressor is explained in separate steps on the following pages. The indicated parts list positions refer to the spare parts lists, repair set lists, special accessories part lists and is available online at www.bock.de. Follow the stated tightening torques of the screws!
You can find the exploded drawing at the end of the maintenance manual.

Preparation: Necessary tools

Pos.	Tool	Size
1	Spanner	SW 10, 13, 15, 17, 19, 24, 27
2	Allen key	6 mm, 10 mm
3	Needle-nosed pliers	
4	Torque spanner	
5	Piston ring plier	

1 Fitting the sight glass, locking screw, transport eyelet

Position in parts list	Parts list position: -
	Tools: Spanner SW 10, 13, 15, 27
	Working course
570, 590	**- Apply the sight glass with oiled O-ring**
580	**- Fix the sight glass with the screws**
F18, F88: 520, 530 **F76:** 520	**- Screw in 1/8“ NPTF locking screws**
F18: 510, 515 **F76, F88:** 510, 500	**- Screw in M33 x 2 locking screws and seal**
F18, F76: 540 **F88:** 540, 550, 560	**- Screw in srew in angle piece with union nut and sealing cap**
F18, F76: 545 **F88:** 545, 546, 547	**- Screw in screw-in fitting with union nut and sealing cap**
531, 534, 500	**- Screw in screw-in fitting, union nut, sealing cap, locking screw and gasket**
600	**- Screw in transport eyelet**

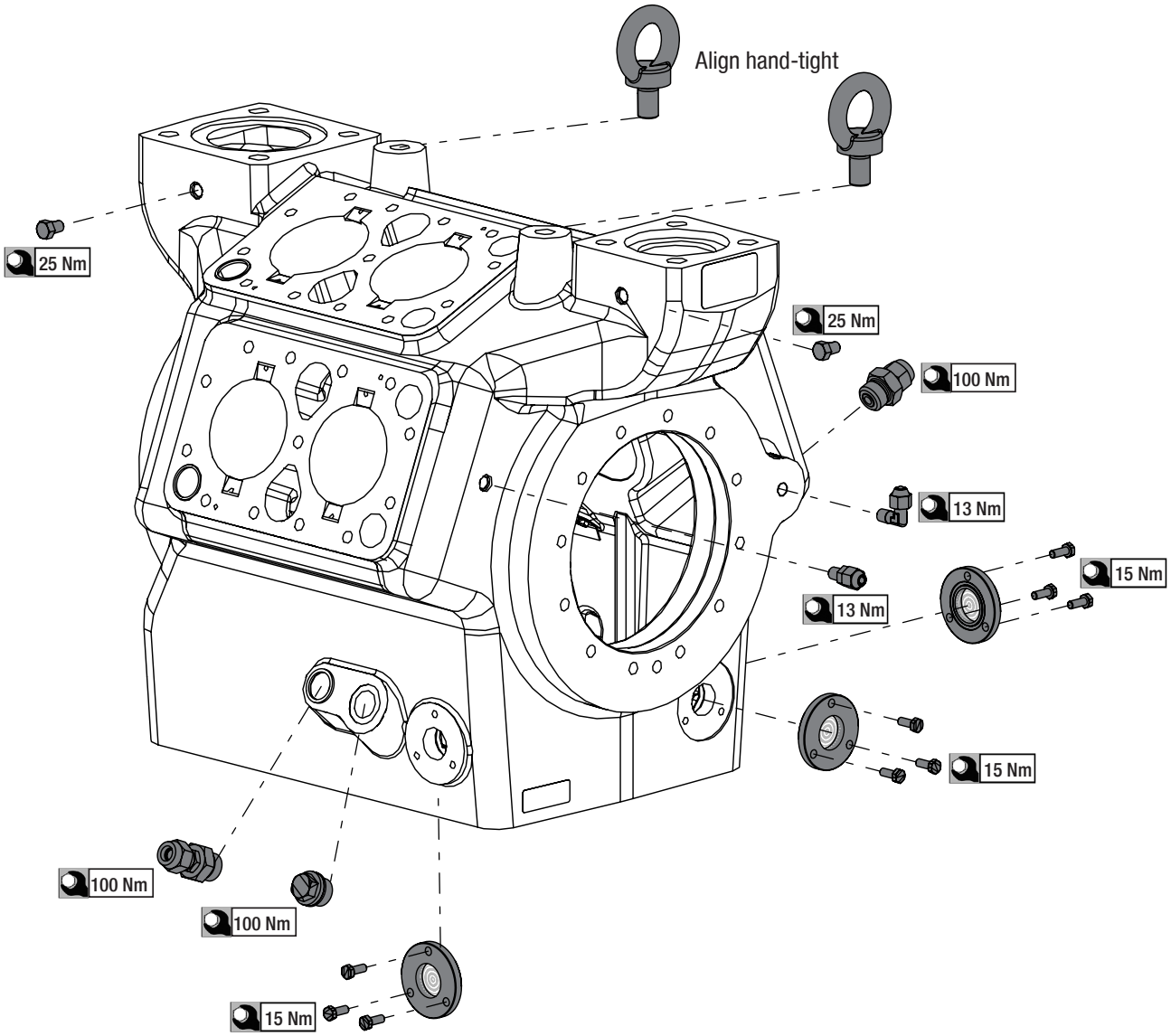

© Danfoss | Climate Solutions | 2023.09

2 Assembly of the pistons / connecting rod

Position in parts list	
	Parts list position: **2040**
	Tools: Needle-nosed pliers
	Working course
2030, 2100, 270, 280	**- Assemble piston and connecting rod with piston pin, use some oil for easier assembly**
	- Mount circlips with pliers on both sides of the piston pins

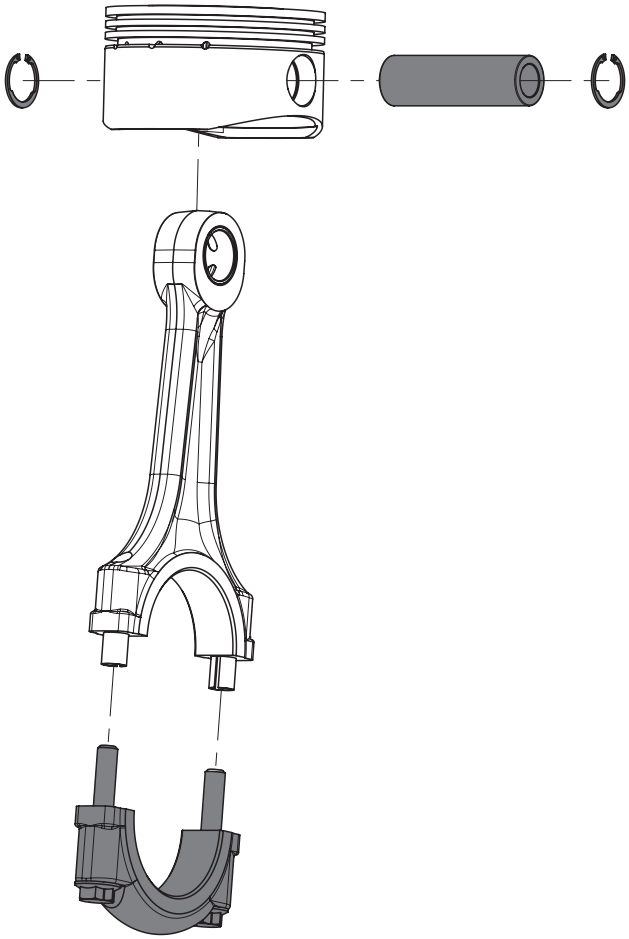

3 Fitting the piston / connecting rod

Position in parts list	
	Parts list position: **2040**
	Tools: Piston ring plier
	Working course
	We recommend cleaning the housing from the inside before assembly
2100	**- Remove connecting rod cap from the preassembled connecting rod assembly and mark it**
	- Apply a little oil to the cylinder bore
2040	**- Insert pistons/connecting rods from below into the cylinder liners**
	-> Pay attention to the correct assembly position (suction fin grooves)
290, 295, 300	**- Install double bevel rings in the lower groove, oil scrape rings in the middle groove and pressure rings in the upper groove**
	-> Mount with the marking "TOP" facing upwards
	-> The butt joints of the piston rings have to be installed min. 90° twisted to each other and may not be lying upon each other

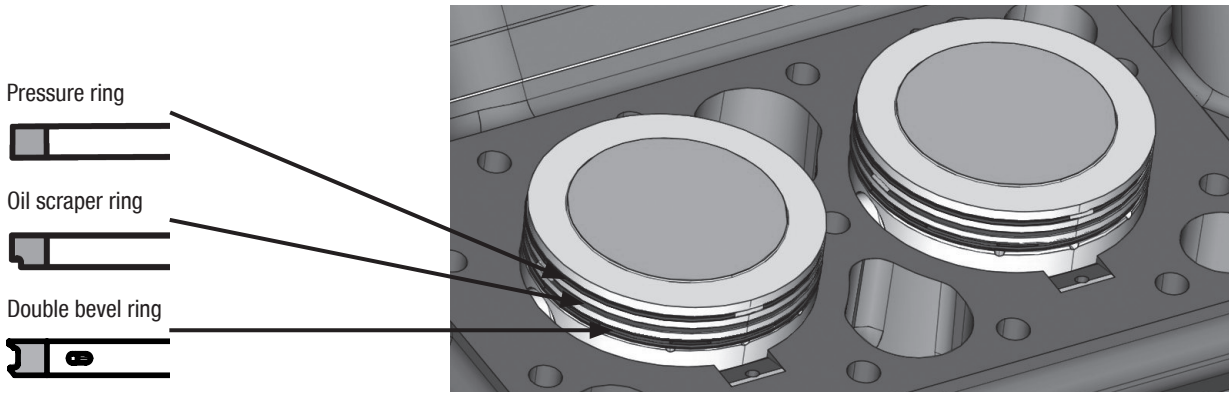

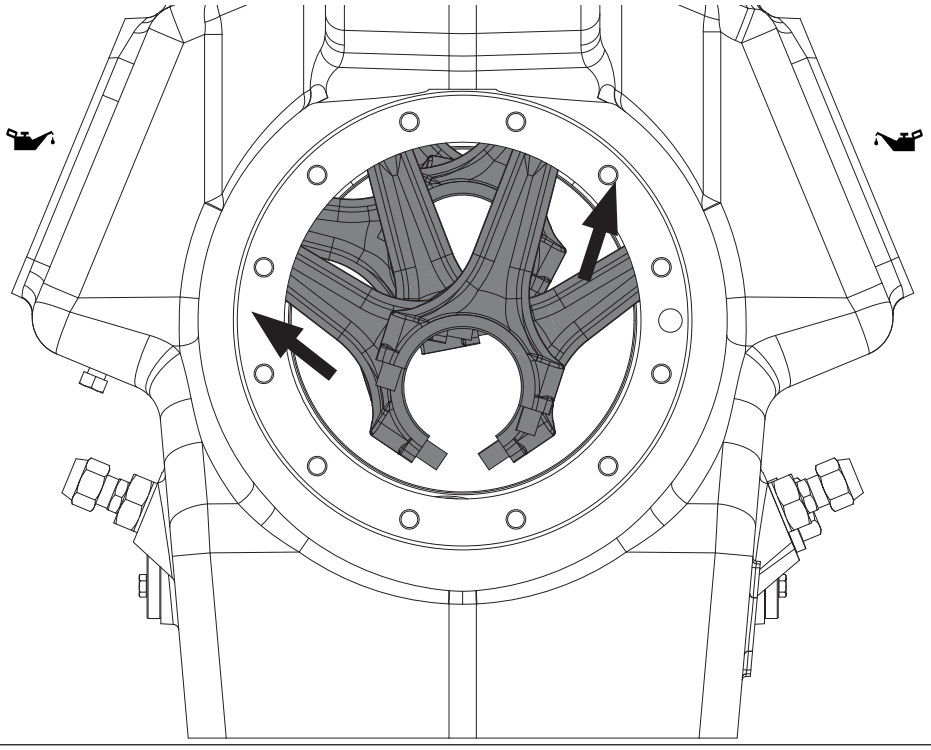

© Danfoss | Climate Solutions | 2023.09

4 Fitting the rear bearing flange and the oil pump

Position in parts list	
	Parts list position: **2110, 2020,** 760
	Tools: Spanner SW 13, SW 17, torque spanner
	Working course

ATTENTION! **The order for assembly of the screws must be observed to avoid damage, see numbering. The screws are tightened in two passes with different tightening torques!**

740, 765	**- The sealing surfaces have to be clean. Slightly oil seals**
760	**- Screw in bearing flange**
460, 470	**- Install oil pump with oiled seal.**
480, 485	**- Screw in screws(M10 x 35)**

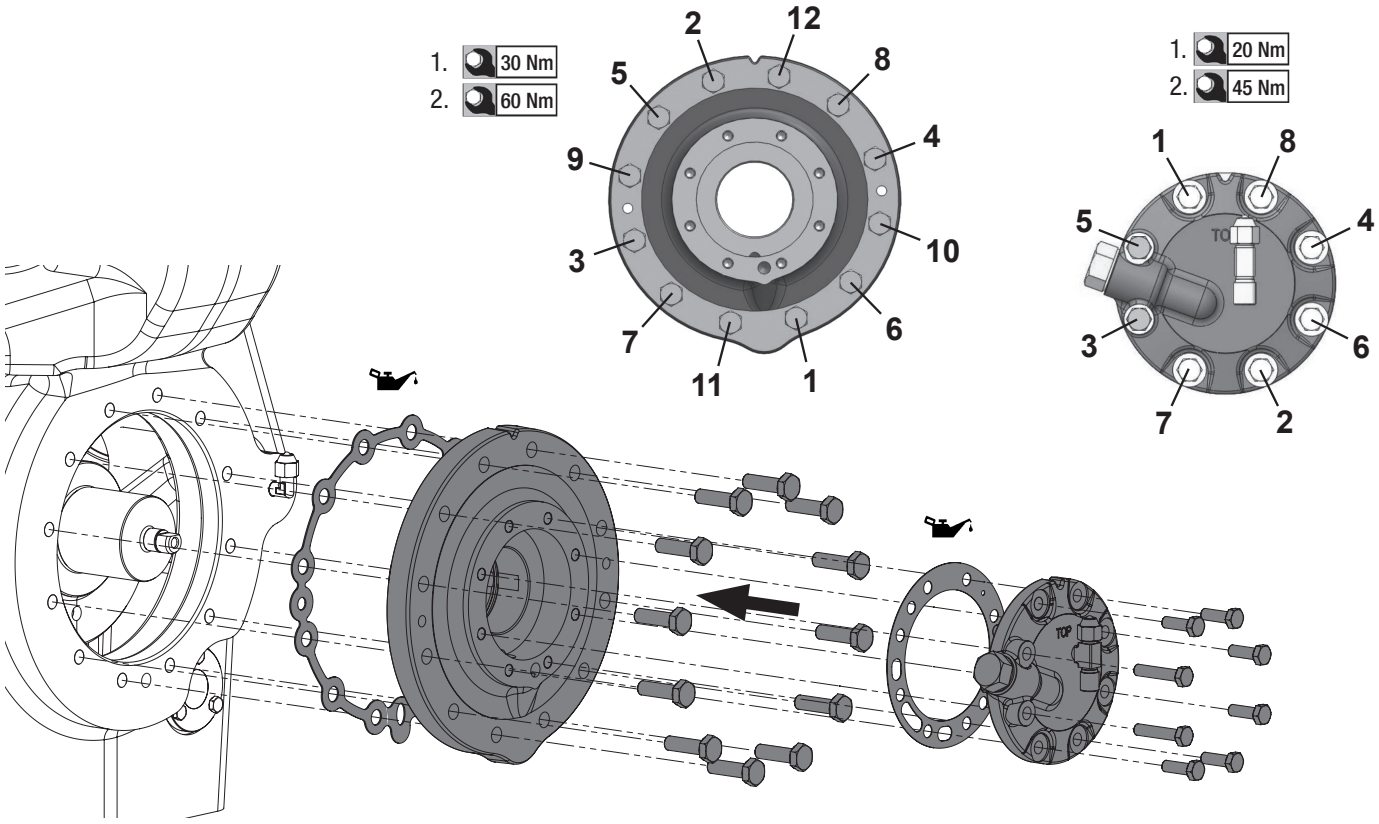

INFO! **Adjust end play!**

The end play of the crankshaft should be min. 0.2 mm, max. 0.5 mm **(F18, F88)** resp. max. 0.75 mm **(F76).** When parts of the driving unit of the compressor have been repaired or replaced, an accurate measurement of the end play is necessary. The measurement has to be at the disassembly shaft seal cover. If the end play is **larger than 0.5 mm**, the starting disc has to be replaced by a thicker starting disc (3.0 mm instead of 2.5 mm).

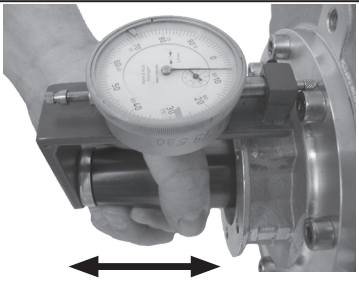

5 Fitting the crankshaft

Position in parts list	
	Parts list position: **2050**
	Tools: -
	Working course
780, 790	**- Fit the crankshaft so that the drive journal engages into the gump gear and oil the bearing zones, keep woodruff key / feather key at hand**

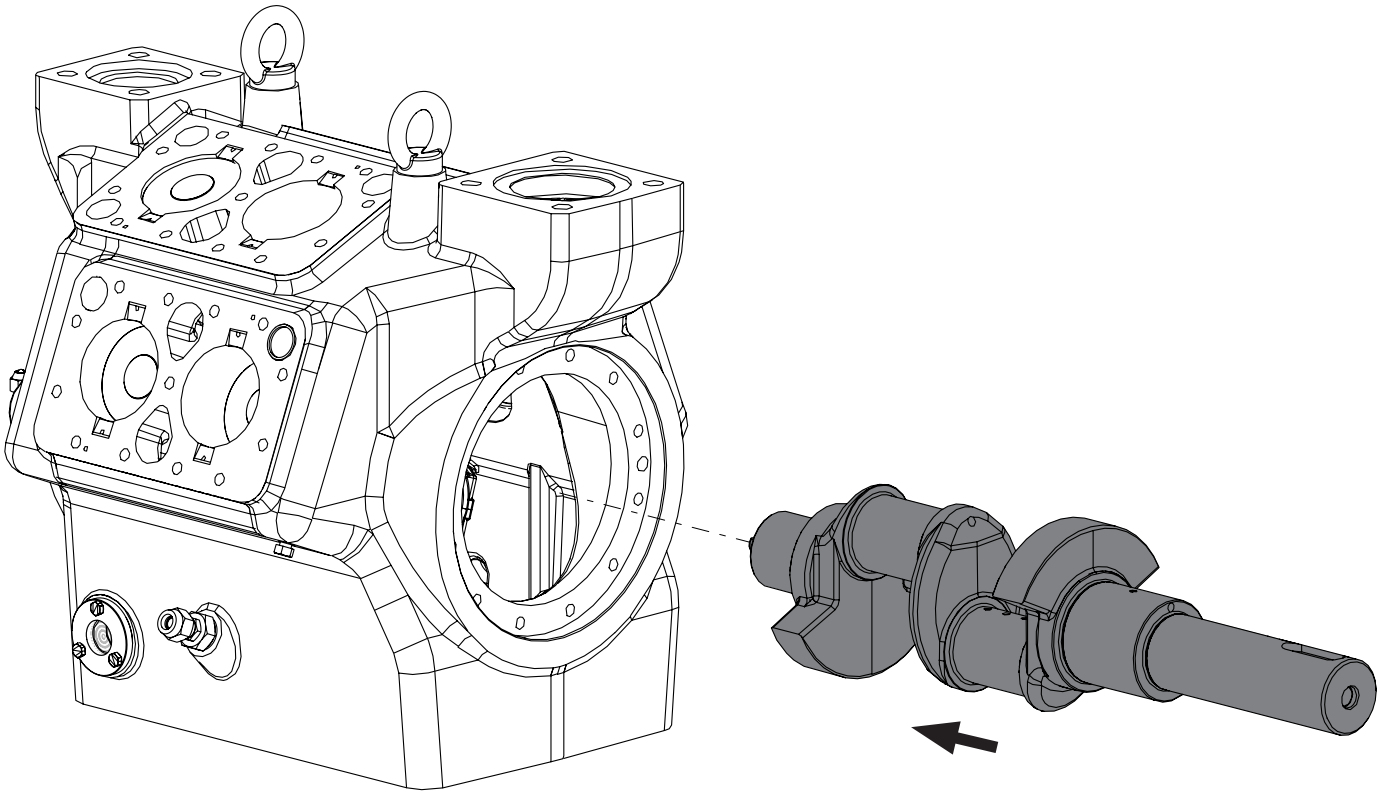

© Danfoss | Climate Solutions | 2023.09

6 Fitting the front bearing flange

Position in parts list

Parts list position: **2140**

Tools: Spanner SW 17, torque spanner

Working course

ATTENTION! The order for assembly of the screws must be observed to avoid damage, see numbering. The screws are tightened in two passes with different tightening torques!

730, 745
F76: 735, 736
F88: 2250

- Install the front bearing flange with oiled gasket to the body so that the hole for the leak oil collection ring faces upwards. If present insert thrust washer and dowel pin.

750

- Tighten the screws

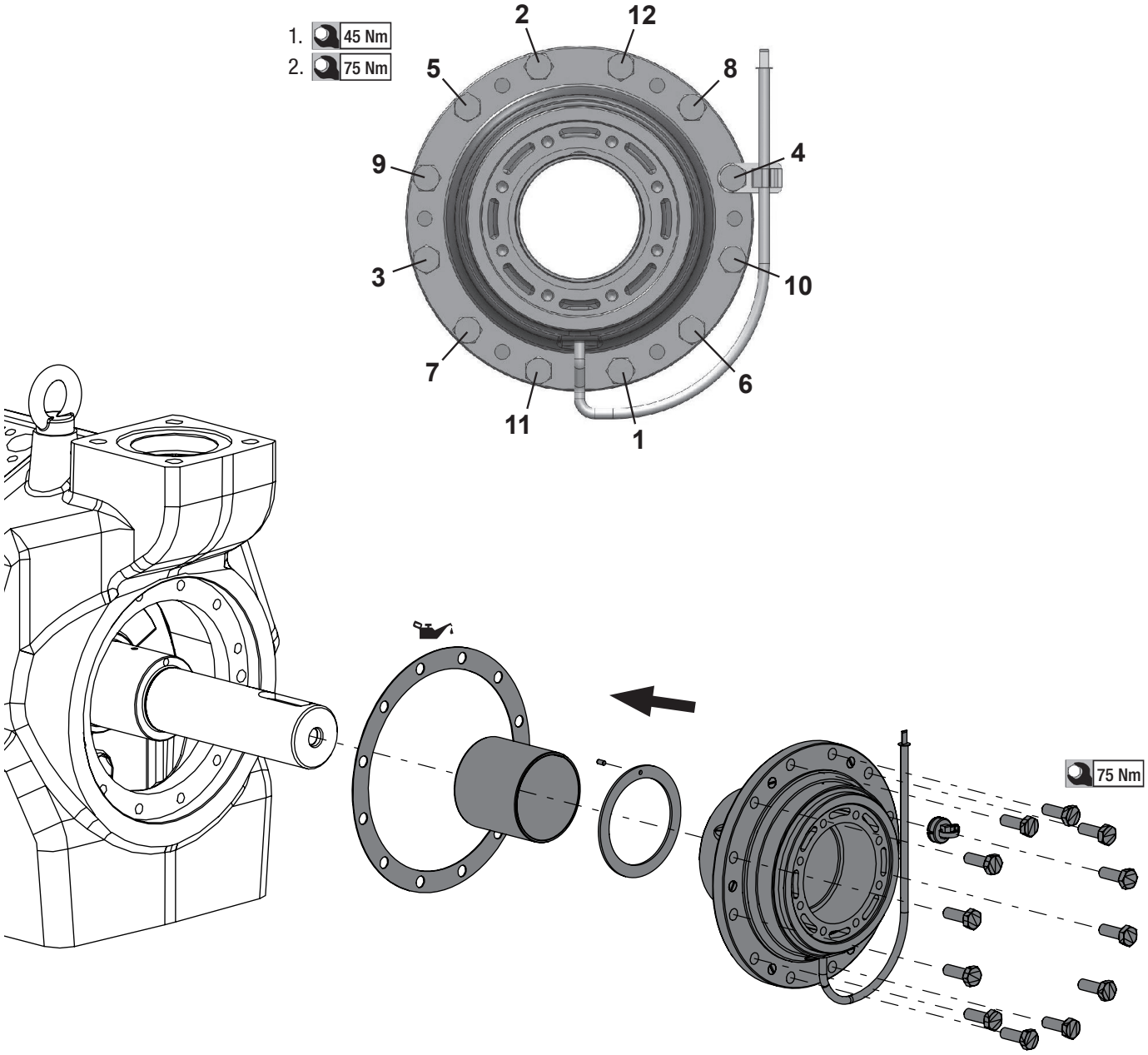

7 Assembly of the inserted connecting rods / pistons

Position in parts list

Parts list position: **2040**

Tools: Piston ring plier, spanner SW 13, torque spanner

Working course

INFO! **Pay attention to the correct pairing of connecting rods and connecting rod caps!**
Renew connecting rod screws or in case of reuse glue in!

290, 295, 300 **- Compress the piston rings with the piston ring plier and insert the piston into the cylinder liner**

2100 **- Place the marked connecting rod caps onto the related connecting rods**

2100 **- Screw on the connecting rod caps and tighten**

780 **- Turn the crankshaft by hand. In case the crankshaft does not rotate freely check the seating of the connecting rods; if necessary, disassemble the connecting rods and carry out this step once more**

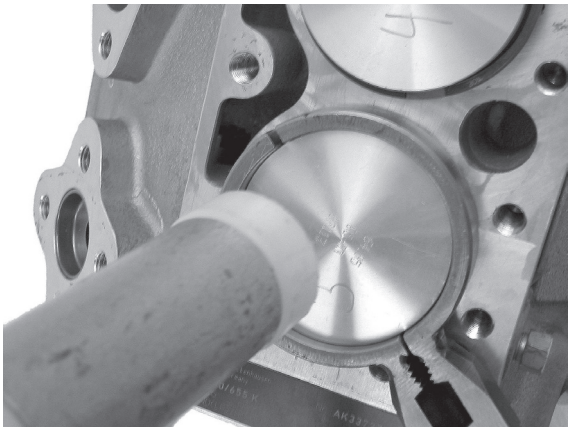

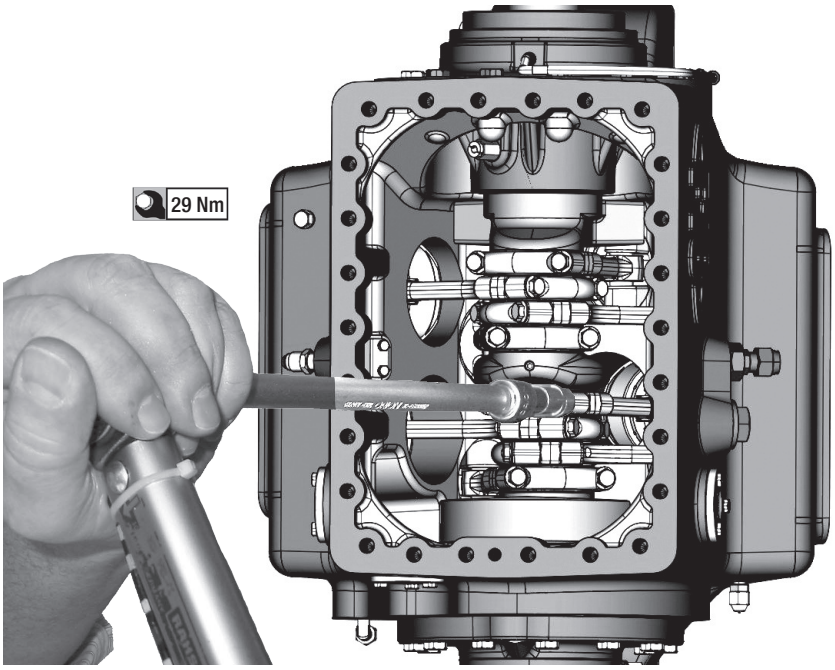

© Danfoss | Climate Solutions | 2023.09

8 Installation of the baseplate

Position in parts list

Parts list position: 20, 30, 40

Tools: Spanner SW 19, torque spanner

Working course

ATTENTION! The order for assembly of the screws must be observed to avoid damage, see numbering. The screws are tightened in two passes with different tightening torques! Order of unnumbered screws at will.

30, 20 **- Install the baseplate with the seal**

40 **- Tighten the M12 x 80 (F18, F88) resp. M10 x 60 (F76) screws**

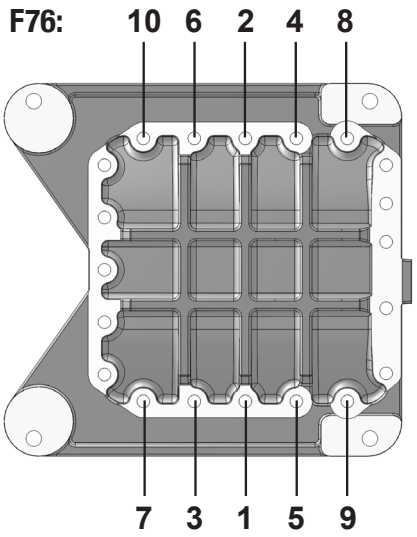

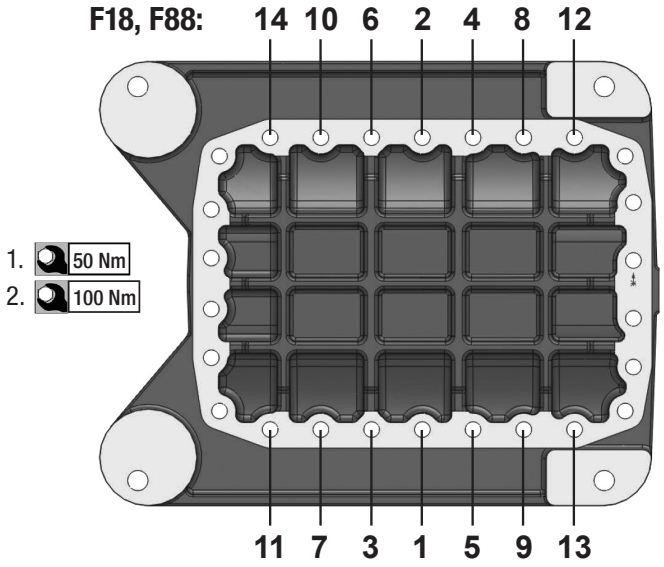

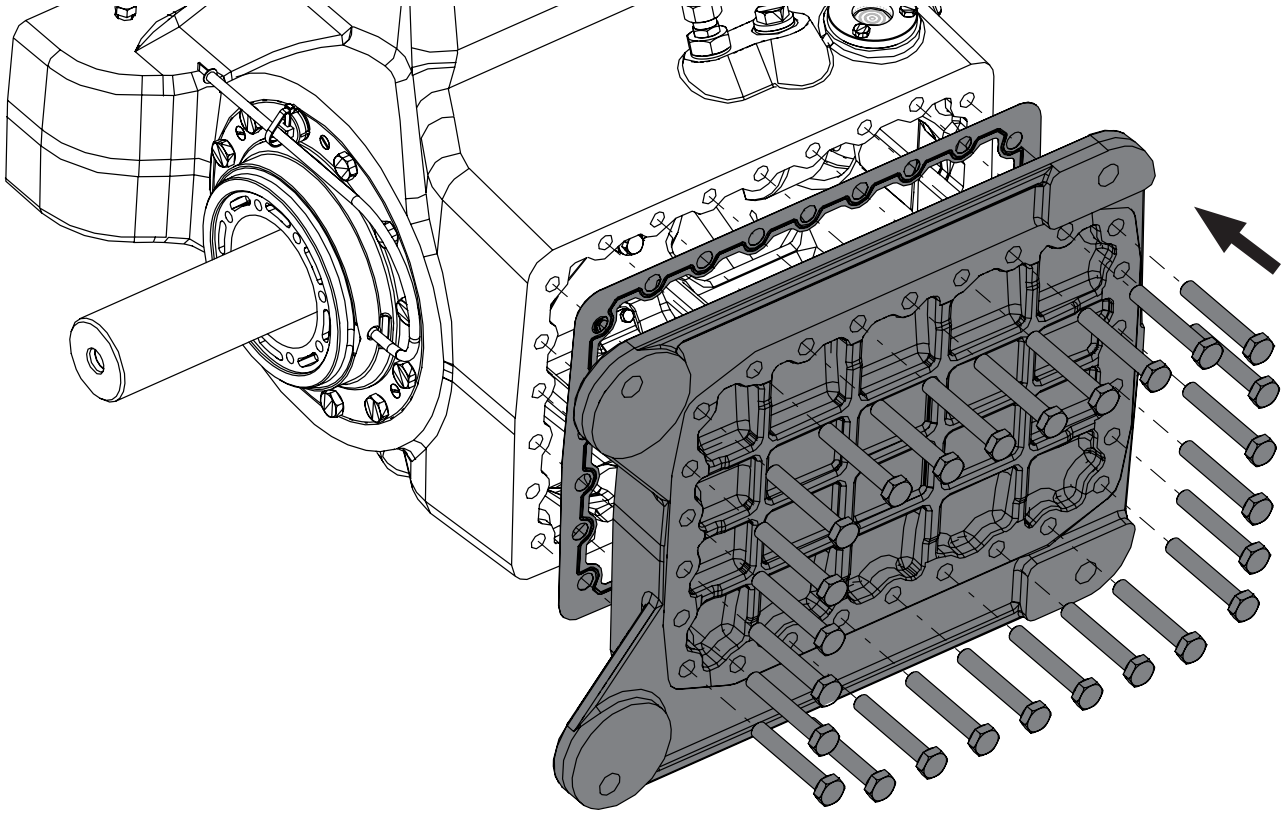

9 Fitting the shaft seal

Position in parts list	
	Parts list position: **2010,** 780, 790
	Tools: Innensechskantschlüssel 6 mm, torque spanner
	Working course
	CAUTION! Avoid damages! Pay attention to the markings, apply a little oil to the parts!
	ATTENTION! The order for assembly of the screws must be observed to avoid damage, see numbering. The screws are tightened in two passes with different tightening torques!
830	**- Push the pressure spring onto the crankshaft. Rotate the spring until the driving catch is engaged in the crankshaft**
830, 882 **F88:** 850	**- Push the guide ring with O-ring and floating ring onto the crankshaft. Rotate all parts until the spring is engaged in the guide ring. Avoid scratches on the floating ring!**
880	**- Install the shaft seal cover with the seal. The inscription „TOP“ must be at the top**
755	**- Press the shaft seal cover onto the bearing flange and tighten the screws**
780	**- Turn the crankshaft by hand**
790	**- Insert woodruff key / feather key**

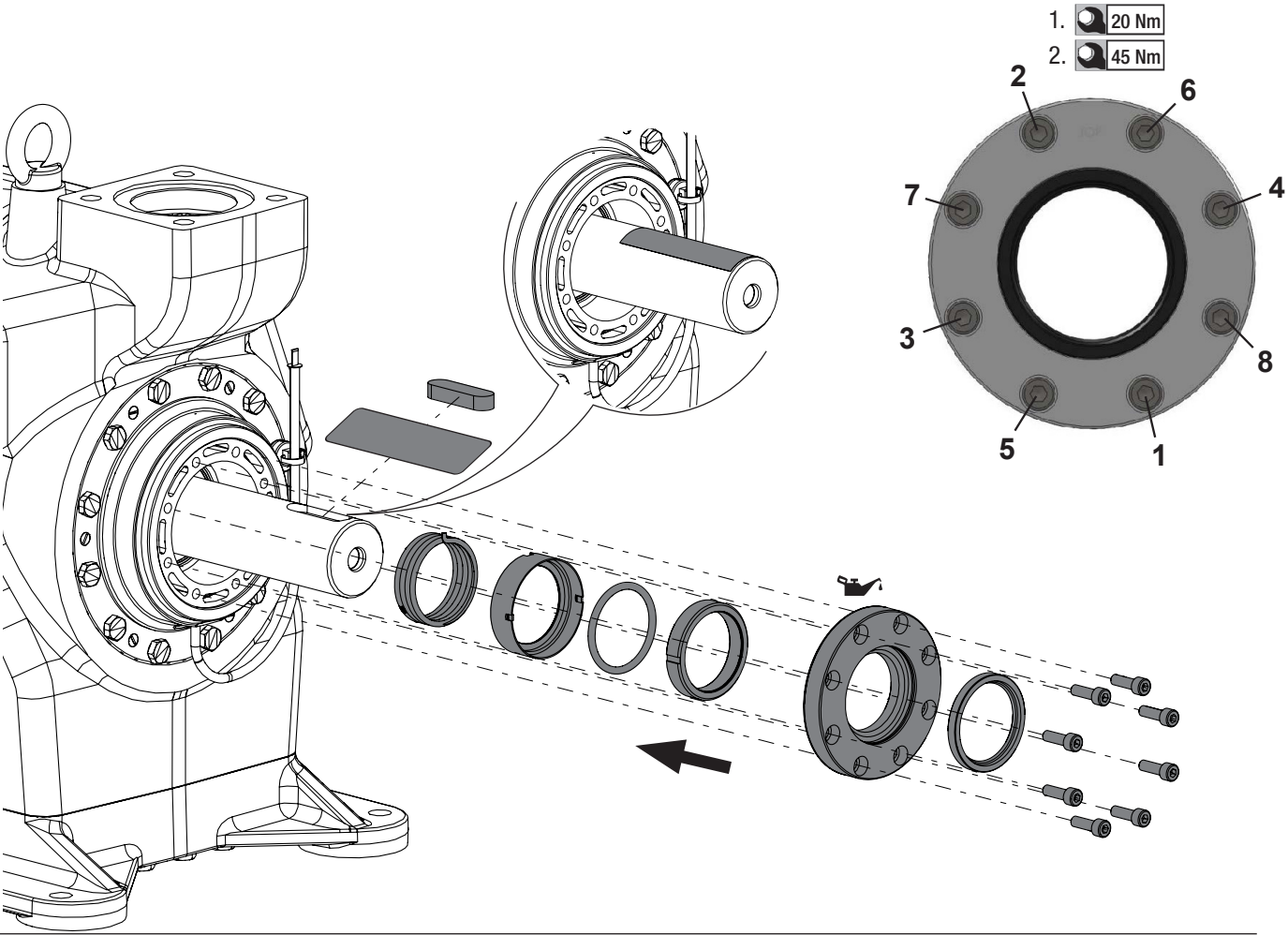

© Danfoss | Climate Solutions | 2023.09

10 Installation of the cylinder covers and valve plates

Position in parts list

Parts list position: **2000, 2005**

Tools: Spanner SW 13, SW 17, torque spanner

Working course

ATTENTION! The order for assembly of the screws must be observed to avoid damage to the valve plate, see numbering. The screws are tightened in two passes with different tightening torques!

50, 70 **- Slightly oil seals**

50, 70 **- Install seals below, valves plates, seals above and cylinder cover together**

- First tighten the screws M8 x 70 by hand

- Then screw in M10 x 90 and M10 x 110 screws

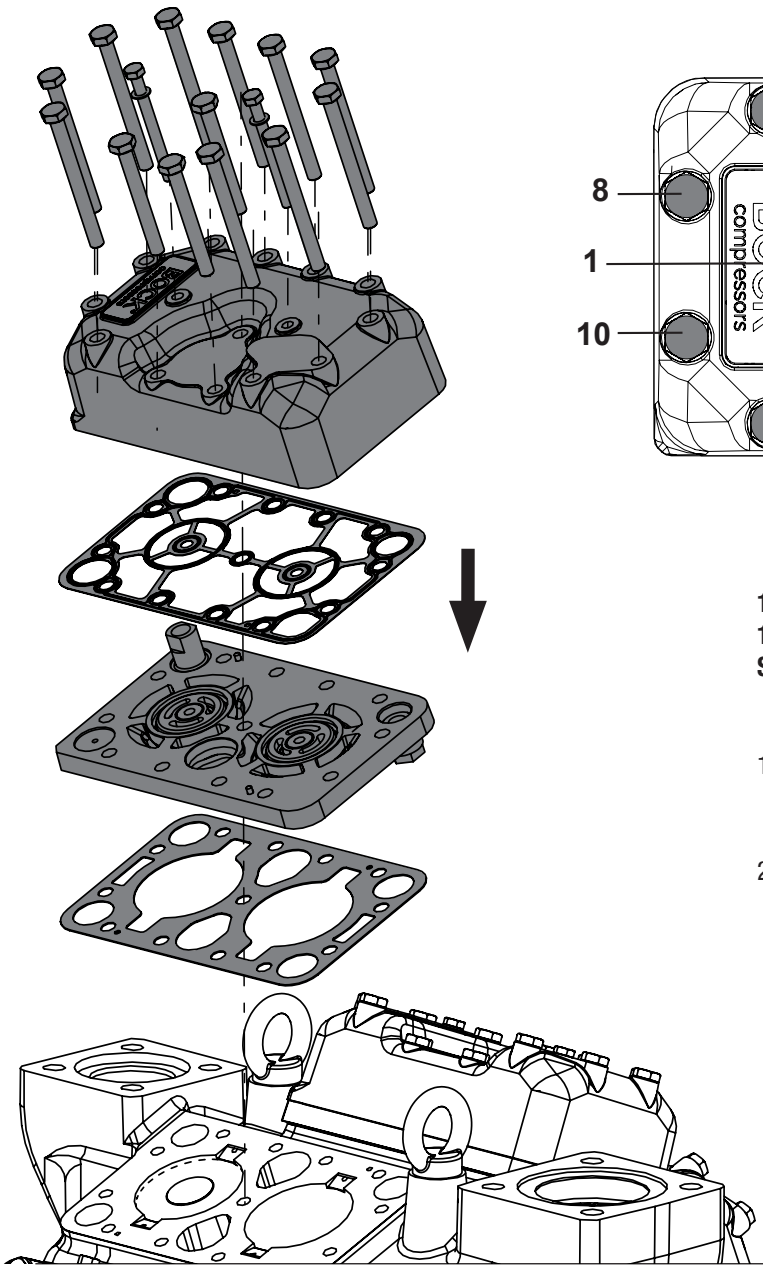

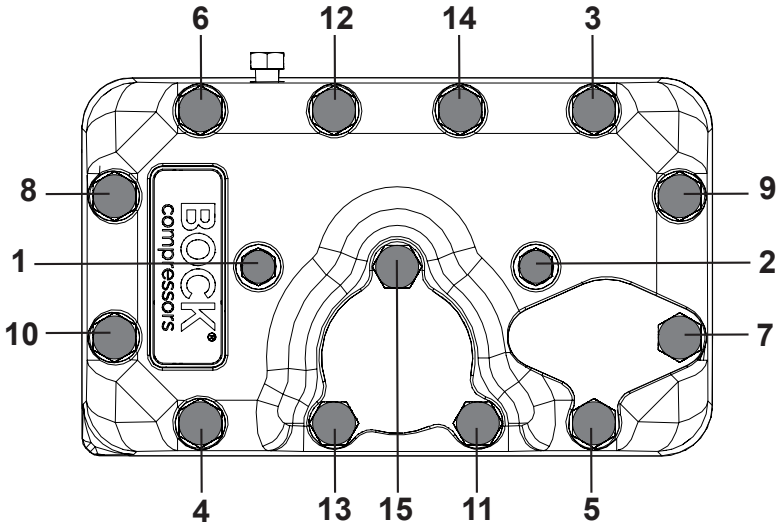

1,2: M8x90, sealing ring 14x8x1
11, 13, 15: M10x90
Sonstige: M10x110

1. M8x70: tighten by hand
   M10x90, M10x110: 45 Nm

2. M10x90, M10x110: 75 Nm
   M8x70: 29 Nm

11 Installation of the oil filter

Position in parts list	Parts list position: **2220,** 500, 505 / 516, 517
	Tools: Spanner SW 19, allen key 10 mm, torque spanner
	Working course
490	**- With the allen key, screw on the filter into the hole in the body and tighten it**
F18, F76: 500 **F88:** 516	**- Install gasket**
F18, F76: 505 **F88:** 517	**- Screw on the M22 x 1.5 mm plug screw and tighten it**

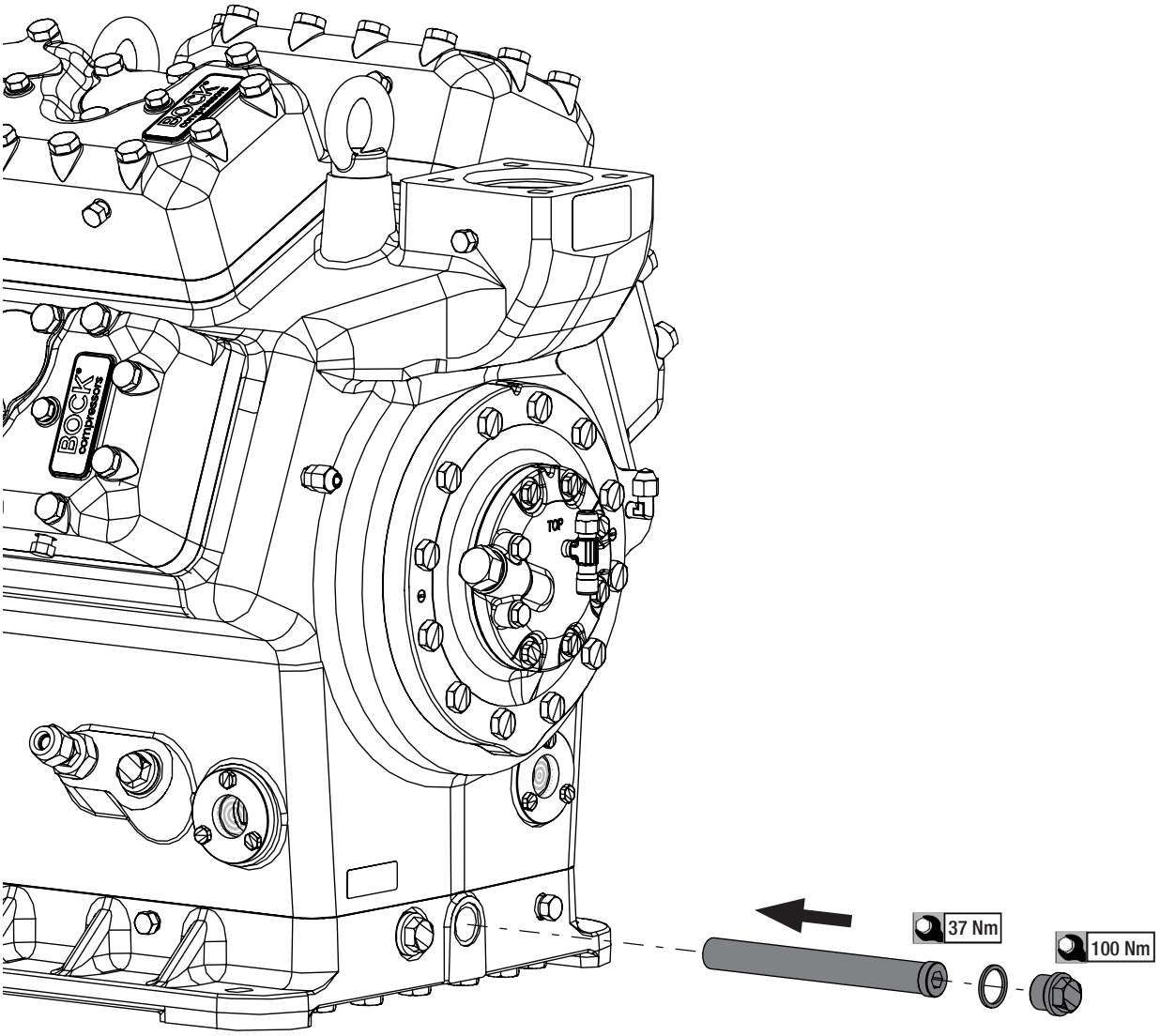

© Danfoss | Climate Solutions | 2023.09

12 Installation of all shut-off valves

Position in parts list	Parts list position: **2060, 2070,** 355, 410 / 220, 410
	Tools: Spanner SW 24, torque spanner
	Working course
210, 400	**- Oil seals**
230, 400	**- Put in the suction filter with the seal**
2060, 2070, **F18, F76:** 355, 410 **F88:** 220, 410	**- Install the shut-off valves (on the discharge and suction side) with seals and screws**

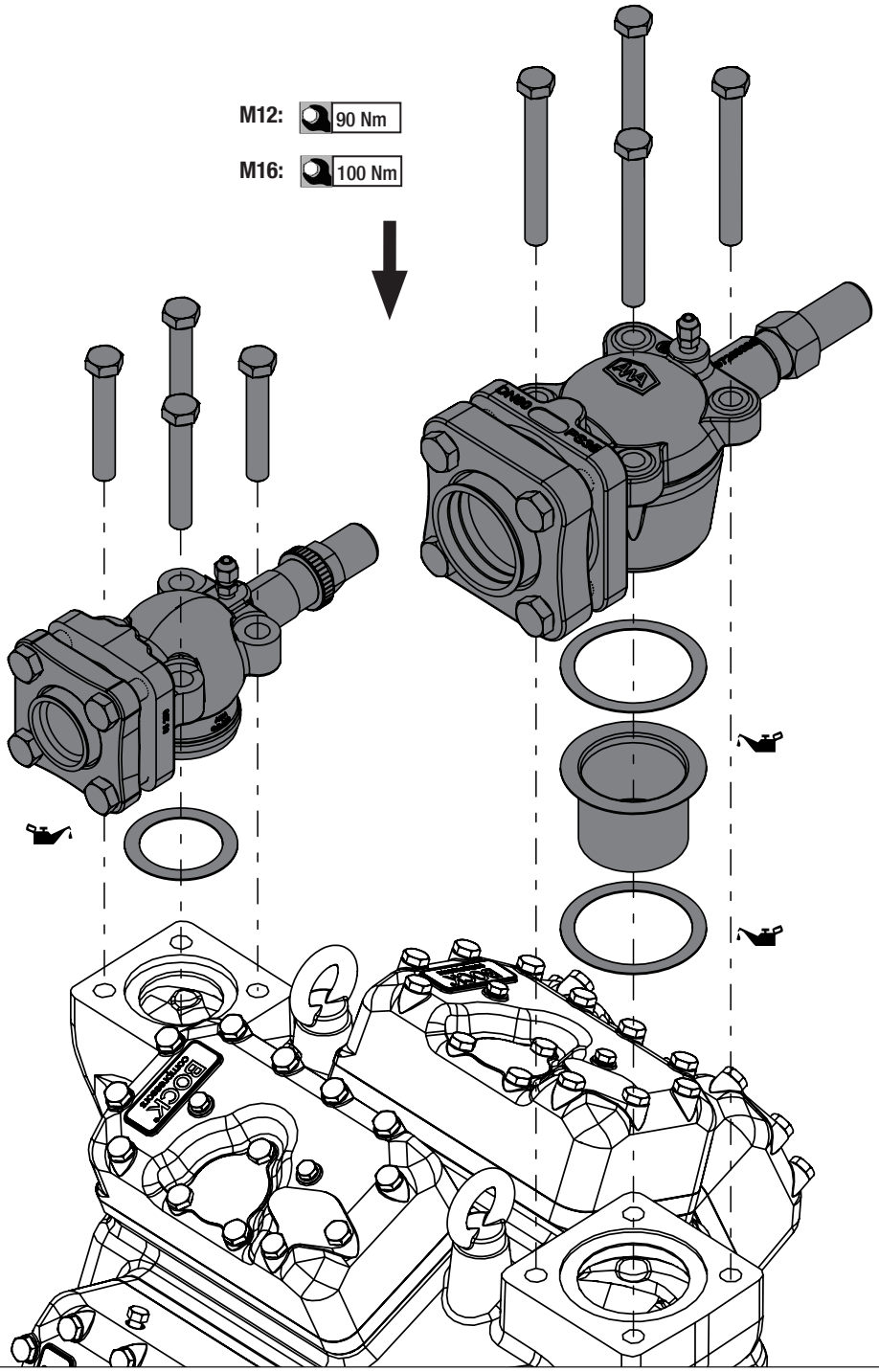

13 Final assembly

Position in parts list	Parts list position:
	Tools:
	Working course
	- Do the next step, such as commissioning, according to the installation instructions of the compressor

© Danfoss | Climate Solutions | 2023.09

Online link to VAP (Compressor selection program) for additional information (eg. spare part lists, exploded drawings):

https://vap.bock.de

In the event of inquiries please contact our Department for Application Technology, phone +49 7022 9454-0.

ENGINEERING
TOMORROW

Danfoss A/S
Climate Solutions • danfoss.com • +45 7488 2222

Any information, including, but not limited to information on selection of product, its application or use, product design, weight, dimensions, capacity or any other technical data in product manuals, catalogues descriptions, advertisements, etc. and whether made available in writing, orally, electronically, online or via download, shall be considered informative, and is only binding if and to the extent, explicit reference is made in a quotation or order confirmation. Danfoss cannot accept any responsibility for possible errors in catalogues, brochures, videos and other material.
Danfoss reserves the right to alter its products without notice. This also applies to products ordered but not delivered provided that such alterations can be made without changes to form, fit or function of the product.
All trademarks in this material are property of Danfoss A/S or Danfoss group companies. Danfoss and the Danfoss logo are trademarks of Danfoss A/S. All rights reserved.

© Danfoss | Climate Solutions | 2023.09