# ADK

## Filter Drier

ADK is a hermetic filter-drier with internal solid block for use on liquid line.



**ADK**

### Features

- Solid block
- Hermetic design.
- Rugged steel shells
- Corrosion resistant epoxy paint
- Cushioned flow for non-turbulent performance
- High water and acid adsorption capacity
- High filtration capacity / efficiency

### Construction / Function

Liquid line filter-driers are often referred to as system protectors because they remove harmful elements from the circulating refrigerants and lubricants before serious damage results.

No matter how many precautions are taken during assembly and installation or servicing of a system, contaminants can find (generate) their way into the system. These contaminants can be solid, such as metal swarf, flux, dust and dirt. Other equally menacing contaminants are soluble, such as water, acid and wax.



The active drying material is in the form of solid block. The solid block is a mixture of molecular Sieve and activated Alumina for maximum moisture and acid removal capability. These adsorbents are formed into a solid block and are held together by a **Synthetic binding material**.

Springs keep the block centred in the rugged steel shell, providing a cushioned flow with non-turbulent performance.

### Technical Data

| | |
|---|---|
| Max. allowable pressure PS | 45 bar |
| Test pressure PT | 47.3 bar |
| Medium Temperature TS | -45…+65°C |
| Fluid Group | I + II |
| List of released refrigerants<br>Fluid group II (A1):<br><br><br>Fluid group I (A2L):<br><br>Note: Fluid group classification according to PED 2014/68/EU. | <br>R134a, R404A, R407C, R410A, R448A, R449A, R450A, R452A, R507, R513A, R744<br>R32, R452B, R454B, R454A, R454C, R455A, R1234ze, R1234yf |

| | |
|---|---|
| Material shell | Steel |
| Paint | Epoxy Powder paint |
| Connections<br>Solder<br>Flare | <br>Copper, ODF<br>Burnished, SAE |
| Protection | 500+ Hours salt spray test |
| Package | Individual packaged |
| Marking | c UL us LISTED (A2L pending)<br>CE (acc. PED, V > 1 liter), |

## Selection table - A1 Refrigerants / $C0_2$

| Type | Part No. | Connection ODF*/SAE* | Flow capacity (kW) pressure drop 0.07 bar ** | | | | | | | | | |
|---|---|---|---|---|---|---|---|---|---|---|---|---|
| | | | R134a | R407C | R404A R507 | R410A | R448A | R449A | R450A | R513A | R452A | R744 |
| ADK-032 | 003595 | 1/4"(6 mm) SAE | 6.7 | 7 | 4.8 | 7.2 | 6.4 | 6.2 | 6.1 | 5.9 | 4.8 | 8.1 |
| ADK-032S | 003596 | 1/4" ODF | 8.1 | 8.4 | 5.7 | 8.7 | 7.7 | 7.5 | 7.4 | 7.0 | 5.8 | 9.7 |
| ADK-036MMS | 003597 | 6 mm ODF | 7.3 | 7.6 | 5.2 | 7.9 | 7.0 | 6.8 | 6.7 | 6.4 | 5.3 | 8.8 |
| ADK-052 | 003598 | 1/4"(6 mm) SAE | 6.9 | 7.2 | 4.9 | 7.5 | 6.6 | 6.5 | 6.4 | 6.1 | 5.0 | 8.3 |
| ADK-052S | 003599 | 1/4" ODF | 9.9 | 10.3 | 7 | 10.7 | 9.4 | 9.2 | 9.1 | 8.6 | 7.1 | 11.9 |
| ADK-056MMS | 003600 | 6 mm ODF | 9.2 | 9.5 | 6.5 | 9.9 | 8.7 | 8.5 | 8.4 | 8.0 | 6.6 | 11.0 |
| ADK-053 | 003601 | 3/8"(10 mm) SAE | 13 | 13.5 | 9.2 | 14 | 12.3 | 12.1 | 11.9 | 11.3 | 9.4 | 15.6 |
| ADK-053S | 003602 | 3/8" ODF | 15 | 15.6 | 10.7 | 16.1 | 14.3 | 14.0 | 13.7 | 13.1 | 10.8 | 18.0 |
| ADK-0510MMS | 003603 | 10 mm ODF | 15 | 15.6 | 10.7 | 16.1 | 14.3 | 14.0 | 13.7 | 13.1 | 10.8 | 18.0 |
| ADK-082 | 003604 | 1/4"(6 mm) SAE | 7.1 | 7.4 | 5.1 | 7.7 | 6.8 | 6.7 | 6.5 | 6.2 | 5.2 | 8.6 |
| ADK-082S | 003605 | 1/4" ODF | 10.9 | 11.4 | 7.8 | 11.8 | 10.4 | 10.2 | 10.0 | 9.6 | 7.9 | 13.2 |
| ADK-086MMS | 003606 | 6 mm ODF | 9.8 | 10.2 | 7 | 10.5 | 9.3 | 9.1 | 9.0 | 8.5 | 7.1 | 11.7 |
| ADK-083 | 003607 | 3/8"(10 mm) SAE | 15 | 15.6 | 10.7 | 16.2 | 14.3 | 14.0 | 13.8 | 13.1 | 10.8 | 18.1 |
| ADK-083S | 003608 | 3/8" ODF | 15 | 15.7 | 10.7 | 16.2 | 14.3 | 14.0 | 13.8 | 13.1 | 10.9 | 18.1 |
| ADK-0810MMS | 003609 | 10 mm ODF | 15 | 15.6 | 10.7 | 16.2 | 14.3 | 14.0 | 13.8 | 13.1 | 10.8 | 18.1 |
| ADK-084 | 003610 | 1/2"(12 mm) SAE | 23.5 | 24.5 | 16.7 | 25.3 | 22.4 | 21.9 | 21.5 | 20.5 | 17.0 | 28.3 |
| ADK-084S | 003611 | 1/2" ODF | 24.5 | 25.6 | 17.5 | 26.4 | 23.3 | 22.9 | 22.5 | 21.4 | 17.7 | 29.5 |
| ADK-0812MMS | 003612 | 12 mm ODF | 24.1 | 25.1 | 17.2 | 26 | 22.9 | 22.5 | 22.1 | 21.1 | 17.4 | 29.0 |
| ADK-162 | 003613 | 1/4"(6 mm) SAE | 7.3 | 7.6 | 5.2 | 7.8 | 6.9 | 6.8 | 6.7 | 6.4 | 5.3 | 8.8 |
| ADK-163 | 003614 | 3/8"(10 mm) SAE | 15.4 | 16 | 10.9 | 16.5 | 14.6 | 14.3 | 14.1 | 13.4 | 11.1 | 18.5 |
| ADK-163S | 003615 | 3/8" ODF | 17.2 | 17.9 | 12.2 | 18.5 | 16.3 | 16.0 | 15.7 | 15.0 | 12.4 | 20.6 |
| ADK-1610MMS | 003616 | 10 mm ODF | 17.1 | 17.8 | 12.2 | 18.5 | 16.3 | 16.0 | 15.7 | 15.0 | 12.4 | 20.6 |
| ADK-164 | 003617 | 1/2"(12 mm) SAE | 28.7 | 29.9 | 20.4 | 30.9 | 27.3 | 26.7 | 26.3 | 25.1 | 20.7 | 34.5 |
| ADK-164S | 003618 | 1/2" ODF | 33 | 34.3 | 23.5 | 35.5 | 31.4 | 30.7 | 30.2 | 28.8 | 23.8 | 39.6 |
| ADK-1612MMS | 003619 | 12 mm ODF | 29.6 | 30.8 | 21.1 | 31.9 | 28.2 | 27.6 | 27.1 | 25.9 | 21.4 | 35.6 |
| ADK-165 | 003620 | 5/8"(16 mm) SAE | 41.1 | 42.8 | 29.2 | 44.3 | 39.1 | 38.3 | 37.7 | 35.9 | 29.7 | 49.4 |
| ADK-165S | 003621 | 5/8"(16 mm) ODF | 45.6 | 47.4 | 32.4 | 49.1 | 43.3 | 42.5 | 41.8 | 39.8 | 32.9 | 54.8 |
| ADK-303 | 003622 | 3/8"(10 mm) SAE | 16.2 | 16.9 | 11.5 | 17.5 | 15.4 | 15.1 | 14.9 | 14.2 | 11.7 | 19.5 |
| ADK-304 | 003623 | 1/2"(12 mm) SAE | 28.7 | 29.9 | 20.4 | 30.9 | 27.3 | 26.7 | 26.3 | 25.1 | 20.7 | 34.5 |
| ADK-304S | 003624 | 1/2" ODF | 33 | 34.4 | 23.5 | 35.6 | 31.4 | 30.8 | 30.3 | 28.8 | 23.8 | 39.7 |
| ADK-305 | 003626 | 5/8"(16 mm) SAE | 48.2 | 50.2 | 34.3 | 52 | 45.9 | 45.0 | 44.2 | 42.1 | 34.8 | 58.0 |
| ADK-305S | 003627 | 5/8"(16 mm) ODF | 48.4 | 50.4 | 34.4 | 52.1 | 46.0 | 45.1 | 44.3 | 42.2 | 34.9 | 58.1 |
| ADK-307S | 003628 | 7/8"(22 mm) ODF | 60.7 | 63.2 | 43.2 | 65.4 | 57.8 | 56.6 | 55.7 | 53.0 | 43.9 | 73.0 |
| ADK-414 | 003629 | 1/2"(12 mm) SAE | 33.7 | 35.1 | 24 | 36.3 | 32.1 | 31.4 | 30.9 | 29.4 | 24.3 | 40.5 |
| ADK-415 | 003632 | 5/8"(16 mm) SAE | 53.7 | 55.9 | 38.2 | 57.8 | 51.1 | 50.0 | 49.2 | 46.9 | 38.8 | 64.5 |
| ADK-415S | 003633 | 5/8"(16 mm) ODF | 57.7 | 60.1 | 41.1 | 62.2 | 54.9 | 53.8 | 52.9 | 50.4 | 41.7 | 69.4 |
| ADK-417S | 003634 | 7/8"(22 mm) ODF | 71.4 | 74.3 | 50.8 | 76.9 | 67.9 | 66.6 | 65.4 | 62.4 | 51.5 | 85.8 |
| ADK-757S | 003635 | 7/8"(22 mm) ODF | 96.7 | 100.7 | 68.8 | 104.2 | 92.0 | 90.1 | 88.6 | 84.4 | 69.8 | 116.2 |
| ADK-759S | 003636 | 1-1/8" ODF | 107.4 | 111.8 | 76.4 | 115.7 | 102.1 | 100.1 | 98.4 | 93.8 | 77.5 | 129.0 |

Note 1: Flow capacities are in accordance with ARI710-86 and DIN8949. R744 is not specified by standard.

Note 2: *) SAE = Flare. ODF = Brazing female

Note 3: **) 0.14 bar pressure drop, multiply values by 1.4

Note 4: Product label update is pending!

**Nominal Flow Capacities bases on following operating conditions:**

| Refrigerant | Evaporating temperature | Liquid temperature | Flow rate kg/kW/sec. | Refrigerant | Evaporating temperature | Liquid temperature | Flow rate kg/kW/sec. |
|---|---|---|---|---|---|---|---|
| R134a | -15°C | +30°C | 0.0068 | R448A | -15°C | +30°C | 0.0061 |
| R407C | | | 0.0063 | R449A | | | 0.0061 |
| R404A/R50 | | | 0.0088 | R450A | | | 0.0074 |
| R410A | | | 0.0059 | R452A | | | 0.0086 |
| R744 | -40°C | -10°C | 0.0039 | R513A | | | 0.0079 |

Note: For other operating conditions use the "Controls Navigator 4.1" selection tool.

## Selection table - A2L Refrigerants

| | | | Flow capacity (kW) pressure drop 0.07 bar ** | | | | | | | |
|---|---|---|---|---|---|---|---|---|---|---|
| **Type** | **Part No.** | **Connection ODF*/SAE*** | **R32** | **R452B** | **R454B** | **R454A** | **R454C** | **R455A** | **R1234ze** | **R1234yf** |
| **ADK-032** | **003595** | 1/4”(6 mm) SAE | 10.4 | 8.1 | 8.1 | 6.2 | 5.4 | 5.7 | 5.9 | 4.8 |
| **ADK-032S** | **003596** | 1/4” ODF | 12.4 | 9.7 | 9.8 | 7.4 | 6.5 | 6.9 | 7.1 | 5.8 |
| **ADK-036MMS** | **003597** | 6 mm ODF | 11.3 | 8.9 | 8.9 | 6.8 | 5.9 | 6.3 | 6.4 | 5.3 |
| **ADK-052** | **003598** | 1/4”(6 mm) SAE | 10.7 | 8.4 | 8.4 | 6.4 | 5.6 | 5.9 | 6.1 | 5.0 |
| **ADK-052S** | **003599** | 1/4” ODF | 15.3 | 12.0 | 12.0 | 9.1 | 8.0 | 8.5 | 8.7 | 7.1 |
| **ADK-056MMS** | **003600** | 6 mm ODF | 14.2 | 11.1 | 11.1 | 8.5 | 7.4 | 7.8 | 8.0 | 6.6 |
| **ADK-053** | **003601** | 3/8”(10 mm) SAE | 20.1 | 15.7 | 15.8 | 12.0 | 10.5 | 11.1 | 11.4 | 9.3 |
| **ADK-053S** | **003602** | 3/8” ODF | 23.2 | 18.1 | 18.2 | 13.8 | 12.1 | 12.8 | 13.1 | 10.8 |
| **ADK-0510MMS** | **003603** | 10 mm ODF | 23.2 | 18.1 | 18.2 | 13.8 | 12.1 | 12.8 | 13.1 | 10.8 |
| **ADK-082** | **003604** | 1/4”(6 mm) SAE | 11.0 | 8.6 | 8.7 | 6.6 | 5.8 | 6.1 | 6.2 | 5.1 |
| **ADK-082S** | **003605** | 1/4” ODF | 16.9 | 13.2 | 13.3 | 10.1 | 8.8 | 9.4 | 9.6 | 7.9 |
| **ADK-086MMS** | **003606** | 6 mm ODF | 15.1 | 11.8 | 11.9 | 9.0 | 7.9 | 8.4 | 8.6 | 7.0 |
| **ADK-083** | **003607** | 3/8”(10 mm) SAE | 23.2 | 18.2 | 18.3 | 13.9 | 12.1 | 12.8 | 13.2 | 10.8 |
| **ADK-083S** | **003608** | 3/8” ODF | 23.2 | 18.2 | 18.3 | 13.9 | 12.1 | 12.9 | 13.2 | 10.8 |
| **ADK-0810MMS** | **003609** | 10 mm ODF | 23.2 | 18.2 | 18.3 | 13.9 | 12.1 | 12.8 | 13.2 | 10.8 |
| **ADK-084** | **003610** | 1/2”(12 mm) SAE | 36.3 | 28.4 | 28.6 | 21.7 | 19.0 | 20.1 | 20.6 | 16.9 |
| **ADK-084S** | **003611** | 1/2” ODF | 37.9 | 29.7 | 29.9 | 22.6 | 19.8 | 21.0 | 21.5 | 17.7 |
| **ADK-0812MMS** | **003612** | 12 mm ODF | 37.3 | 29.2 | 29.3 | 22.3 | 19.5 | 20.6 | 21.1 | 17.4 |
| **ADK-162** | **003613** | 1/4”(6 mm) SAE | 11.3 | 8.8 | 8.9 | 6.7 | 5.9 | 6.2 | 6.4 | 5.2 |
| **ADK-163** | **003614** | 3/8”(10 mm) SAE | 23.7 | 18.6 | 18.7 | 14.2 | 12.4 | 13.1 | 13.4 | 11.0 |
| **ADK-163S** | **003615** | 3/8” ODF | 26.5 | 20.7 | 20.9 | 15.8 | 13.8 | 14.7 | 15.0 | 12.3 |
| **ADK-1610MMS** | **003616** | 10 mm ODF | 26.5 | 20.7 | 20.8 | 15.8 | 13.8 | 14.7 | 15.0 | 12.3 |
| **ADK-164** | **003617** | 1/2”(12 mm) SAE | 44.4 | 34.7 | 34.9 | 26.5 | 23.2 | 24.5 | 25.1 | 20.6 |
| **ADK-164S** | **003618** | 1/2” ODF | 51.0 | 39.9 | 40.1 | 30.4 | 26.6 | 28.2 | 28.9 | 23.7 |
| **ADK-1612MMS** | **003619** | 12 mm ODF | 45.8 | 35.8 | 36.0 | 27.3 | 23.9 | 25.3 | 25.9 | 21.3 |
| **ADK-165** | **003620** | 5/8”(16 mm) SAE | 63.5 | 49.7 | 50.0 | 37.9 | 33.2 | 35.1 | 36.0 | 29.6 |
| **ADK-165S** | **003621** | 5/8”(16 mm) ODF | 70.4 | 55.1 | 55.4 | 42.0 | 36.8 | 39.0 | 39.9 | 32.8 |
| **ADK-303** | **003622** | 3/8”(10 mm) SAE | 25.0 | 19.6 | 19.7 | 15.0 | 13.1 | 13.9 | 14.2 | 11.7 |
| **ADK-304** | **003623** | 1/2”(12 mm) SAE | 44.4 | 34.7 | 34.9 | 26.5 | 23.2 | 24.5 | 25.1 | 20.6 |
| **ADK-304S** | **003624** | 1/2” ODF | 51.0 | 39.9 | 40.1 | 30.5 | 26.7 | 28.2 | 28.9 | 23.7 |
| **ADK-305** | **003626** | 5/8”(16 mm) SAE | 74.5 | 58.3 | 58.7 | 44.5 | 38.9 | 41.2 | 42.2 | 34.7 |
| **ADK-305S** | **003627** | 5/8”(16 mm) ODF | 74.8 | 58.5 | 58.8 | 44.6 | 39.0 | 41.4 | 42.4 | 34.8 |
| **ADK-307S** | **003628** | 7/8”(22 mm) ODF | 93.9 | 73.4 | 73.9 | 56.0 | 49.0 | 51.9 | 53.2 | 43.7 |
| **ADK-414** | **003629** | 1/2”(12 mm) SAE | 52.1 | 40.8 | 41.0 | 31.1 | 27.2 | 28.8 | 29.5 | 24.3 |
| **ADK-415** | **003632** | 5/8”(16 mm) SAE | 83.0 | 64.9 | 65.3 | 49.5 | 43.3 | 45.9 | 47.0 | 38.6 |
| **ADK-415S** | **003633** | 5/8”(16 mm) ODF | 89.2 | 69.8 | 70.2 | 53.3 | 46.6 | 49.4 | 50.5 | 41.5 |
| **ADK-417S** | **003634** | 7/8”(22 mm) ODF | 110.4 | 86.3 | 86.8 | 65.9 | 57.6 | 61.1 | 62.5 | 51.4 |
| **ADK-757S** | **003635** | 7/8”(22 mm) ODF | 149.4 | 116.9 | 117.6 | 89.2 | 78.1 | 82.7 | 84.7 | 69.5 |
| **ADK-759S** | **003636** | 1-1/8” ODF | 166.0 | 129.8 | 130.6 | 99.1 | 86.7 | 91.8 | 94.0 | 77.2 |

Note 1: Flow capacities are in accordance with ARI710-86 and DIN8949.

Note 2: *) SAE = Flare. ODF = Brazing female

Note 3: **) 0.14 bar pressure drop, multiply values by 1.4

Note 4: Product label update is pending!

**Nominal Flow Capacities bases on following operating conditions:**

| **Refrigerant** | **Evaporating temperature** | **Liquid temperature** | **Flow rate kg/kW/sec.** | **Refrigerant** | **Evaporating temperature** | **Liquid temperature** | **Flow rate kg/kW/sec.** |
|---|---|---|---|---|---|---|---|
| R32 | -15°C | +30°C | 0.0039 | R454C | -15°C | +30°C | 0.0058 |
| R452B | | | 0.0043 | R455A | | | 0,0072 |
| R454B | | | 0.0047 | R1234ze | | | 0.0076 |
| R454A | | | 0.0061 | R1234yf | | | 0.0089 |

Note: For other operating conditions use the “Controls Navigator 4.1” selection tool.

## Water and Acid Adsorption Capacity

### A1 Refrigerants / $CO_2$

| Type / Size | Water adsorption capacity (gram) | | | | | | | | | | Acid Adsorption Capacity (gram) |
|---|---|---|---|---|---|---|---|---|---|---|---|
| | Liquid Temperature 24°C | | | | | Liquid Temperature 52°C | | | | | |
| | R134a | R404A R507 | R407C | R410A | R744 | R134a | R404A/ R507 | R407C | R410A | R744* | |
| ADK-03 | 4.9 | 4.9 | 3.4 | 2.8 | 4.6 | 4.4 | 4.6 | 2.9 | 2.4 | 4.2 | 0.8 g |
| ADK-05 | 11.8 | 11.8 | 8.2 | 6.8 | 8.7 | 10.6 | 10.9 | 7 | 5.8 | 7.9 | 2.3 g |
| ADK-08 | 17.9 | 18 | 12.4 | 10.3 | 13.2 | 16.2 | 16.6 | 10.7 | 8.8 | 12.0 | 3.3 g |
| ADK-16 | 23 | 23.1 | 16 | 13.2 | 17.0 | 20.8 | 21.3 | 13.8 | 11.4 | 15.4 | 4.5 g |
| ADK-30 | 51.8 | 53.5 | 36.9 | 30.6 | 41.0 | 47.4 | 49.3 | 31.8 | 26.3 | 38.1 | 11.3 g |
| ADK-41 | 81.7 | 84.3 | 58.2 | 48.3 | 54.3 | 74.8 | 77.8 | 50.2 | 41.4 | 50.5 | 16.8 g |
| ADK-75 | 143.5 | 148.1 | 102.1 | 84.8 | 96.3 | 131.4 | 136.6 | 88.1 | 72.8 | 89.5 | 29.9 g |

| Type / Size | Water adsorption capacity (gram) | | | | | | | | | | Acid Adsorption Capacity (gram) |
|---|---|---|---|---|---|---|---|---|---|---|---|
| | Liquid Temperature 24°C | | | | | Liquid Temperature 52°C | | | | | |
| | R448A | R449A | R450A | R452A | R513A | R448A | R449A | R450A | R452A | R513A | |
| ADK-03 | 4.7 | 4.7 | 6.0 | 3.4 | 6.0 | 4.3 | 4.3 | 5.5 | 2.7 | 5.4 | 0.8 g |
| ADK-05 | 9.0 | 9.0 | 11.4 | 6.5 | 11.3 | 8.2 | 8.2 | 10.3 | 5.0 | 10.3 | 2.3 g |
| ADK-08 | 13.7 | 13.7 | 17.3 | 9.8 | 17.2 | 12.4 | 12.4 | 15.7 | 7.7 | 15.7 | 3.3 g |
| ADK-16 | 17.5 | 17.5 | 22.2 | 12.6 | 22.1 | 16.0 | 16.0 | 20.2 | 9.9 | 20.1 | 4.5 g |
| ADK-30 | 39.9 | 39.9 | 52.0 | 32.8 | 51.7 | 37.5 | 36.3 | 46.1 | 25.6 | 45.9 | 11.3 g |
| ADK-41 | 52.8 | 52.8 | 68.8 | 43.4 | 68.4 | 49.7 | 48.1 | 61.0 | 33.9 | 60.7 | 16.8 g |
| ADK-75 | 93.8 | 93.8 | 122.1 | 77.1 | 121.4 | 88.2 | 85.3 | 108.4 | 60.1 | 107.8 | 29.9 g |

Note: *) Liquid temperature -10 °C

### A2L Refrigerants

| Type / Size | Water adsorption capacity (gram) | | | | | | | | | | Acid Adsorption Capacity (gram) |
|---|---|---|---|---|---|---|---|---|---|---|---|
| | Liquid Temperature 24°C | | | | | Liquid Temperature 52°C | | | | | |
| | R32 | R452B | R454A R454B R454C | R455A | R1234ze R1234yf | R32 | R452B | R454A R454B R454C | R455A | R1234ze R1234yf | |
| ADK-03 | 3.4 | 3.4 | 3.4 | 3.4 | 6.0 | 2.7 | 2.7 | 2.7 | 2.7 | 5.5 | 0.8 g |
| ADK-05 | 6.5 | 6.5 | 6.5 | 6.5 | 11.4 | 5.2 | 5.0 | 5.0 | 5.0 | 10.3 | 2.3 g |
| ADK-08 | 9.8 | 9.8 | 9.8 | 9.8 | 17.3 | 7.8 | 7.7 | 7.7 | 7.7 | 15.7 | 3.3 g |
| ADK-16 | 12.6 | 12.6 | 12.6 | 12.6 | 22.2 | 10.1 | 9.9 | 9.9 | 9.9 | 20.2 | 4.5 g |
| ADK-30 | 32.8 | 32.8 | 32.8 | 32.8 | 57.6 | 26.2 | 25.6 | 25.6 | 25.6 | 52.5 | 11.3 g |
| ADK-41 | 43.4 | 43.4 | 43.4 | 43.4 | 76.2 | 34.6 | 33.9 | 33.9 | 33.9 | 69.4 | 16.8 g |
| ADK-75 | 77.1 | 77.1 | 77.1 | 77.1 | 135.4 | 61.5 | 60.1 | 60.1 | 60.1 | 123.3 | 29.9 g |

**The water capacities are according to ARI-Standard 710 and DIN 8948. (except R744)**

| Refrigerant | EPD | Refrigerant | EPD | Refrigerant | EPD | Refrigerant | EPD |
|---|---|---|---|---|---|---|---|
| R134a | 50 ppm | R448A | 60 ppm | R32 | 50 ppm | R454A | 60 ppm |
| R407C | 50 ppm | R449A | 60 ppm | R452B | 60 ppm | R454C | 60 ppm |
| R404A/R507 | 50 ppm | R450A | 60 ppm | R454B | 60 ppm | R455A | 60 ppm |
| R410A | 50 ppm | R452A | 60 ppm | | | R1234ze | 50 ppm |
| R744 | 50 ppm | R513A | 60 ppm | | | R1234yf | 50 ppm |

Note: EPD = End Point Dryness

Dimensions (mm)

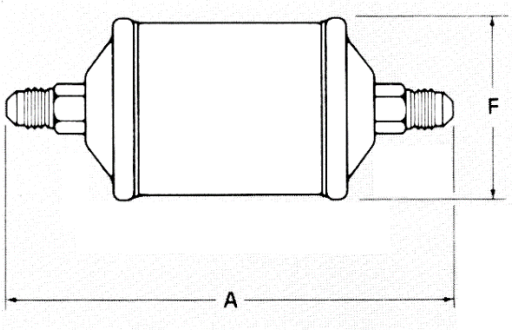


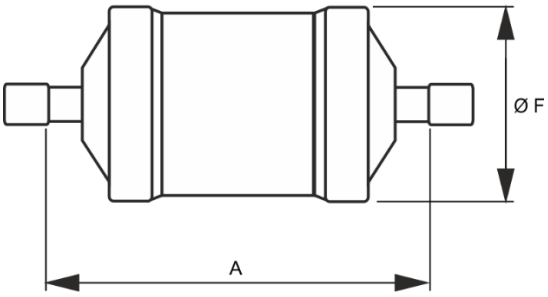


| Type | Part No. | A | B | F | Connection | | | |
|---|---|---|---|---|---|---|---|---|
| | | | | | Brazing/ ODF | | Flare/ SAE | |
| | | (mm) | (mm) | (mm) | (mm) | (Inch) | (mm) | (Inch) |
| ADK-032 | 003595 | 111 | - | 44 | - | - | 6 | 1/4” |
| ADK-032S | 003596 | - | 70 | 44 | - | 1/4” | - | - |
| ADK-036MMS | 003597 | - | 70 | 44 | 6 | - | - | - |
| ADK-052 | 003598 | 122 | - | 64 | - | - | 6 | 1/4” |
| ADK-052S | 003590 | - | 82 | 64 | - | 1/4” | - | - |
| ADK-056MMS | 003600 | - | 82 | 64 | 6 | - | - | - |
| ADK-053 | 003601 | 130 | - | 64 | - | - | 10 | 3/8” |
| ADK-053S | 003602 | - | 82 | 64 | - | 3/8” | - | - |
| ADK-0510MMS | 003603 | - | 82 | 64 | 10 | - | - | - |
| ADK-082 | 003604 | 143 | - | 64 | - | - | 6 | 1/4” |
| ADK-082S | 003605 | - | 103 | 64 | - | 1/4” | - | - |
| ADK-086MMS | 003606 | - | 103 | 64 | 6 | - | - | - |
| ADK-083 | 003607 | 151 | - | 64 | - | - | 10 | 3/8” |
| ADK-083S | 003608 | - | 102 | 64 | - | 3/8” | - | - |
| ADK-0810MMS | 003609 | - | 102 | 64 | 10 | - | - | - |
| ADK-084 | 003610 | 156 | - | 64 | - | - | 12 | 1/2” |
| ADK-084S | 003611 | - | 103 | 64 | - | 1/2” | - | - |
| ADK-0812MMS | 003612 | - | 103 | 64 | 12 | - | - | - |
| ADK-162 | 003613 | 167 | - | 64 | - | - | 6 | 1/4” |
| ADK-163 | 003614 | 175 | - | 64 | - | - | 10 | 3/8” |
| ADK-163S | 003615 | - | 127 | 64 | - | 3/8” | - | - |
| ADK-1610MMS | 003616 | - | 127 | 64 | 10 | - | - | - |
| ADK-164 | 003617 | 181 | - | 64 | - | - | 12 | 1/2” |
| ADK-164S | 003618 | - | 127 | 64 | - | 1/2” | - | - |
| ADK-1612MMS | 003619 | - | 127 | 64 | 12 | - | - | - |
| ADK-165 | 003620 | 192 | - | 64 | - | - | 16 | 5/8” |
| ADK-165S | 003621 | - | 128 | 64 | - | 5/8” | - | - |
| ADK-303 | 003622 | 242 | - | 76 | - | - | 10 | 3/8” |
| ADK-304 | 003623 | 247 | - | 76 | - | - | 12 | 1/2” |
| ADK-304S | 003624 | - | 194 | 76 | - | 1/2” | - | - |
| ADK-305 | 003626 | 263 | - | 76 | - | - | 16 | 5/8” |
| ADK-305S | 003627 | - | 194 | 76 | - | 5/8” | - | - |
| ADK-307S | 003628 | - | 194 | 76 | 22 | 7/8” | - | - |
| ADK-414 | 003629 | 253 | - | 89 | - | - | 12 | 1/2” |
| ADK-415 | 003632 | 264 | - | 89 | - | - | 16 | 5/8” |
| ADK-415S | 003633 | - | 200 | 89 | - | 5/8” | - | - |
| ADK-417S | 003634 | - | 199 | 89 | 22 | 7/8” | - | - |
| ADK-757S | 003635 | - | 337 | 91 | 22 | 7/8” | - | - |
| ADK-759S | 003636 | - | 351 | 91 | - | 1-1/8” | - | - |

**DISCLAIMER:** The Copeland logo is a trademark and service mark of Copeland LP or one of its affiliates. Copeland Europe GmbH shall not be liable for errors in the stated capacities, dimensions, etc., as well as typographic errors. Products, specifications, assumptions, designs and technical data contained in this document are subject to modification by us without prior notice. Illustrations are not binding. ©2025 Copeland LP. All rights reserved.