Data sheet



Solenoid valve

EV212B

Direct operated with isolated diaphragm for dirt and aggressive fluids

Description

The isolating diaphragm design ensures that no fluid enters the armature area which means valves can be used for:

- Aggressive fluids
- Fluid with impurities
- Fluid with risk of lime stone build up

Features & benefits

- Stainless steel body
- Clip on coil
- Viscosity: up to 50 cSt
- Ambient temperature: up to 50 °C
- Coil enclosure: up to IP67

Applications

It is recommended to use a filter in front of the valve. Recommended filter 50 mesh (297 microns).

Figure: Filter

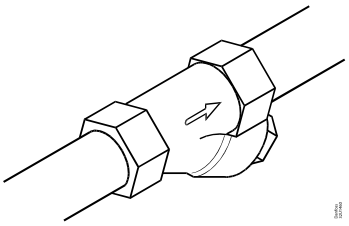

In water applications, exercise the valves at least once every 24 hours, meaning change the state of the valve. The valve exercise will minimize the risk of the valve sticking due to calcium carbonate, zinc or iron oxide build-up.

Figure: Exercise - Valve on/off

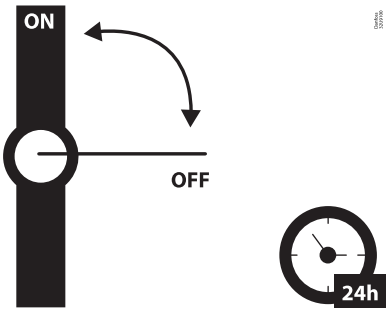

To minimize scaling, and corrosion attack it is recommended that the water passing the valve have the following values:

- Hardness 6 – 18 °dH to avoid scaling (chalk / limestone build up).
- Conductivity 50 – 800 µS/cm to avoid brass dezincification and corrosion.
- Above 25 °C media temperature avoid stagnant water inside the valve to avoid dezincification and corrosion attack.

Applications:

- Marine ballast water treatment systems (sample intake)
- Dosing systems, 1. Washing and cleaning systems (Alkaline) and 2. Filling
- Pump cooling fx. Vacuum systems
- Systems with particles (Dirt) and aggressive media

Ordering

Product code numbers

Table: Stainless steel, valve body NC

ISO228/1 connection	Orifice	K_v value	Function
	[mm]	[m³/h]	NC
G⅛	2	0.15	032U3576
G¼	2	0.15	032U3578
G⅛	3	0.3	032U3581
G¼	3	0.3	032U3751
G⅜	4	0.38	032U3754
G¼	4.5	0.55	032U3590
G⅜	4.5	0.55	032U3762

Accessories code numbers

Coil

BB/BY high performance coil

Figure: BB/BY high performance coil



Table: High performance coils

Type	$T_{ambient}$	Supply voltage	Voltage variation	Frequency	Control	Power consumption		Code no.
	[°C]	[V]		[Hz]		[W]	[VA]	
BB024AS	-40 – 80	24	-15%, +10%	50	NO, NC	11	19	018F7358
BB230AS	-40 – 80	220 – 230	-15%, +10%	50	NO, NC	11	19	018F7351
BB012DS	-40 – 50	12	±10%	DC	NC, NO, UN (Latching)	13	–	018F7396
BB024DS	-40 – 50	24	±10%	DC	NC, NO, UN (Latching)	16	–	018F7397

BR marine coils, high performance coils

Figure: BR marine coils, high performance coils



Table: BR marine coils, high performance coils

Type	$T_{ambient}$	Supply voltage	Voltage variation	Frequency	Power consumption		Code no.
	[°C]	[V]		[Hz]	[W]	[VA]	
BR024CS	-40 – 50	24	±10%	50	14	26	018F4722
		24	±10%	60	12	21	
BR120CS	-40 – 50	110	±10%	50	14	27	018F4723
		110 – 120	±10%	60	14	27	
BR230CS	-40 – 50	220 – 230	±10%	50	16	31	018F4720
			±10%	60	13	24	
BR024DS	-40 – 50	24	±10%	DC	16	–	018F4721

EEC Electronic coil controller

Figure: EEC Electronic coil controller



Table: High performance coils

Type	$T_{ambient}$	Supply voltage	Voltage variation	Frequency	Control	Power consumption	Code no.
	[°C]	[V]		[Hz]		[W]	
BE240CS	-25 – 55	208 – 240	±10%	60	NO, NC	4	018F6783
		208 – 240	±10%	50	NO, NC	4	

Cable plug

Figure: Cable plug



Table: Cable plug

Cable plug size	Description	Code no
DIN 18	Cable plug IP67	042N1256

Universal electronic multi-timer

Figure: Type ET 20 M



Table: Type ET 20 M

Type	Voltage [V]	Suitable for coil types	Code no.
BA024A	24 – 240	AL, AM, AS, AZ, BA, BD, BB	042N0185

Overview

Product portfolio

Table: Portfolio overview

Features	EV212B
	
Body material	Stainless steel
DN	2 – 4.5 mm
Connection	G⅛" – G⅜"
Sealing material	FKM
Function	NC
K_v	0.15 – 0.55 m^3/h
Differential pressure range	0 – 12 bar
Temperature range	0 – 50 °C

Functions

Function NC

When voltage is applied to the coil (5), the armature (2) with the isolating diaphragm (3) is lifted clear of the valve orifice (4) and opens for flow through the valve. The valve is open as long as there is voltage to the coil.

When voltage is disconnected, the isolating diaphragm (3) is pressed down against the orifice by the spring (1). The valve will be closed for as long as the voltage to the coil is disconnected. The isolating diaphragm keeps the medium away from the actuator.

The space above the isolating diaphragm is filled up with silicone oil.

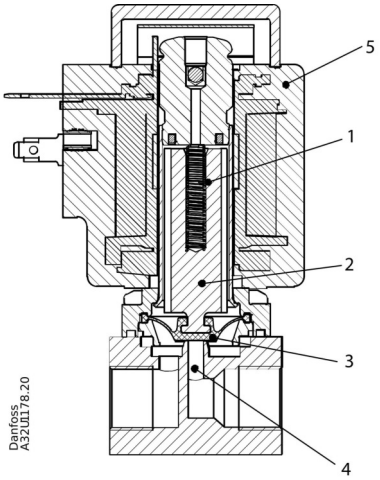

1	Closing spring
2	Armature
3	Isolating diaphragm
4	Orifice
5	Coil

Product details

General data

Table: Technical data

Media	FKM	Contaminated or aggressive media
Media temperature	FKM	0 – 50 °C
Ambient temperature	Max. 50 °C	
K_v value	DN2	0.15 m^3/h
	DN3	0.3 m^3/h
	DN4	0.38 m^3/h
	DN4.5	0.55 m^3/h
Min. opening differential pressure	0 bar	
Max. opening differential pressure	Up to 12 bar	
Max. working pressure	Up to 12 bar (Equal to max. differential pressure)	
Max. test pressure	DN2 – 4	18 bar
	DN4.5	15 bar
Viscosity	Max. 50 cSt	

Materials

Table: Materials

Components	Materials	Specifications
Valve body	Stainless steel	W.no. 1.4404 / AISI 316L[(1)]
Flange for isolating diaphragm	Stainless steel	W.no. 1.4404 / AISI 316L[(1)]
Isolating diaphragm	FKM	–
O-rings	FKM	–
Fluid above isolating diaphragm	Silicone oil	–

[(1)] W. No. according to DIN 17440

Pressure and temperature data

Table: Differential pressure range

Connection ISO228/1	Orifice size	230 V 50 Hz / 24 V 50 Hz BB230AS / BB024AS 018F7351 / 018F7358	220 – 230 V BB230CS, 018F7363		208 – 230 V AC 50/60 Hz EEC BE240CS, 018F6783	12/24 V DC BB012DS, 018F7396 BB024DS, 018F7397
			50 Hz	60 Hz		
	[mm]	[bar]	[bar]		[bar]	[bar]
G⅛	2	12	12	10	12	12
G¼	2	12	12	10	12	12
G⅛	3	12	12	10	12	12
G¼	3	12	12	10	12	12
G⅜	4	7.5	7.5	6	12	10
G¼	4.5	6	6	5	10	10
G⅜	4.5	6	6	5	10	10

Dimensions

Figure: Dimensions

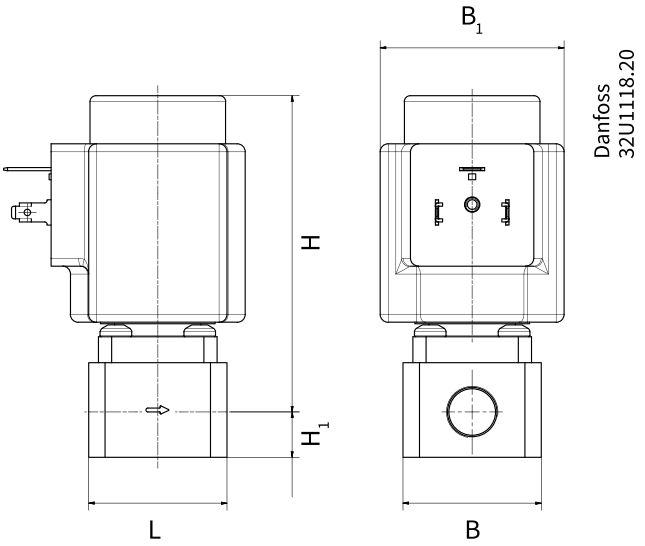

Table: Dimensions and weight

Type	L	B	B_1 Coil type BB/BY/BE	H	H_1	Weight without coil
	[mm]	[mm]	[mm]	[mm]	[mm]	[kg]
EV212B 2SS G⅛	35	35	46	85	11.5	0.30
EV212B 2SS G¼	35	35	46	85	11.5	0.29
EV212B 3SS G⅛	35	35	46	85	11.5	0.30
EV212B 3SS G¼	35	35	46	85	11.5	0.29
EV212B 4SS G⅜	38	38	46	87	13	0.33
EV212B 4.5SS G¼	35	35	46	85	11.5	0.29
EV212B 4.5SS G⅜	38	38	46	87	13	0.33

Installation

Mounting angle

Figure: Mounting angle

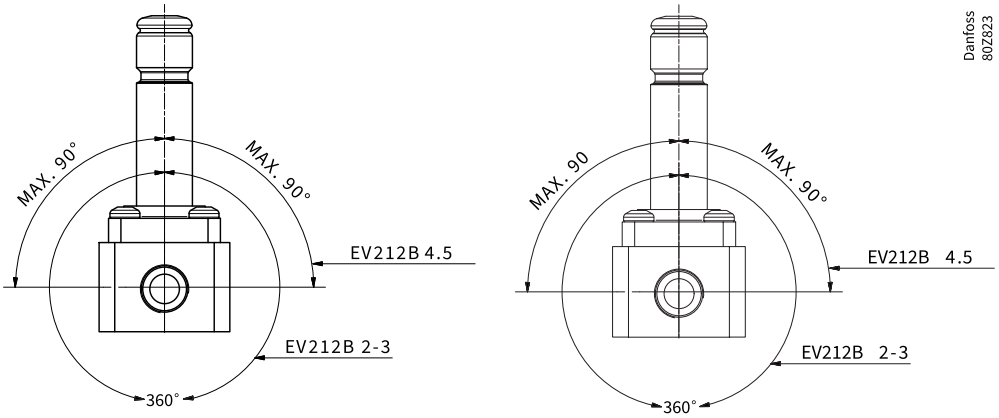

Certificates, declarations and approvals

The list contains all certificates, declarations, and approvals for this product type. Individual code number may have some or all of these approvals, and certain local approvals may not appear on the list.

When you click on the link you will be directed to the latest version of the 'Declaration of Conformity'. Products developed and sold before this date of issue conform to the directives/standards in force at the time of their sale.

Approval type	Title	Certification body	Approval topic
Manufacturer's Declaration	Danfoss MD 033F0232.AA	Danfoss	PED, Pressure
Export Control Declaration	Solenoid valves - Stainless steel	Danfoss	
Manufacturer's Declaration	Danfoss MD 033F0699.00	Danfoss	China RoHS
Export Control Declaration	Solenoid valves – Polymer, Bronze, Brass, Cast iron	Danfoss	
EU Declaration	Danfoss EU 033F0683.05	Danfoss	LVD, EU RoHS
UA Declaration	Danfoss UA 8481	Danfoss	UA RoHS
Pressure Safety Certificate	LLC CDC EURO-TYSK UA.TR.089.1015.02-22	LLC CDC EURO TYSK - Ukraine	PED, Pressure
Manufacturer's Declaration	Danfoss MD 033F1140.01	Danfoss	EU RoHS

Contact details

Online support

Danfoss offers a wide range of support along with our products, including digital information, software, mobile apps and expert guidance. See the possibilities below.

The Danfoss Design center

Discover the Design Center, our advanced digital platform that streamlines product selection. With integrated tools and enhanced type pages, it's simpler than ever to access product information and documentation, and to select the right products. Check the availability of Danfoss products at partner locations and enjoy seamless transitions from selection to purchase with our basket-to-basket functionality. Whether you're buying from our distributors or directly from the Product Store, the Design Center simplifies your experience. Learn more at: designcenter.danfoss.com.

The Danfoss product store

The Danfoss Product Store is a one-stop shop available 24/7 for our customers, no matter where you are in the world or what area of industry you work in. Browse our catalog, check product details and documentation, view your prices and product availability, and quickly finalize your purchase. Start browsing at: store.danfoss.com.

Danfoss Partner Portal/Product Data tool

Designed to support you with easy access to product data extracts, essential resources, tools, and information. The Partner Portal provides a centralized hub for product documentation, training materials, marketing assets, and technical support, ensuring you have everything you need to succeed and grow your business with Danfoss. The Partner Portal is available 24/7 at: partner.danfoss.com and is ready to support your business.

Find technical documentation

Find technical documentation you need to get your project up running. Get direct access to our official collection of data sheets, certificates and declarations, manuals and guides, 3D models and drawings, case stories, brochures, and much more. Start searching now at: documentation.danfoss.com.

Danfoss Learning

Danfoss Learning is a free online learning platform. It features courses and materials specifically designed to help engineers, installers, service technicians, and wholesalers better understand the products, applications industry topics, and trends that will help you do your job better. Find your local Danfoss website here: learning.danfoss.com.

Get local information and support

Local Danfoss websites are the main sources for help and information about our company and products. Find product availability, get the latest reginal news, or connect with a nearby expert - all in your own language. Find your local Danfoss website here: danfoss.com.

Danfoss A/S

Climate Solutions . danfoss.com . +45 7488 2222

Any information, including, but not limited to information on selection of product, its application or use, product design, weight, dimensions, capacity or any other technical data in product manuals, catalogues description, advertisements, etc. and whether made available in writing, orally, electronically, online or via download, shall be considered informative, and is only binding if and to the extent, explicit reference is made in a quotation or order confirmation. Danfoss cannot accept any responsibility for possible errors in catalogues, brochures, videos and other material. Danfoss reserves the right to alter its products without notice. This also applies to products ordered but not delivered provided that such alterations can be made without changes to form, fit or function of the products. All trademarks in this material are property of Danfoss A/S or Danfoss group companies. Danfoss and the Danfoss logo are trademarks of Danfoss A/S. All rights reserved.