

K Circular Duct Fans

High Quality radial fan for circular ducts

- Available with **AC and EC motors**
- **Indoor** and **outdoor** installation
- **Reliable** and **airtight**
- **Mounting bracket** included
- **Noise and energy optimized** impeller

Find more details in our online catalogue

Flexibility

The K fans are intended to use for **supply** or **extract** air, designed to be installed in **any position.** This ensures that the fans can be used in a variety of **commercial** and **domestic** applications.

Reliability

The unit's **airtight casing** and corrosion resistance permits **outdoor** and **indoor** use. The combination of reliable casing and motor construction ensures, to minimize the need for maintenance of the fans and allows long **continuous operation.**

Performance

Sound optimized radial impeller together with **high efficient** external rotor motor are designed to ensure high-level performance to **minimize power consumption** and **maximize efficiency**.

Accessories

K fans can be selected together with variety types of **accessories** as fast clamps, heaters, filters, dampers, etc.

Certifications

AMCA Worldwide Certified Ratings: Sound and Air Performance

Systemair certifies that the model shown herein is licensed to bear the AMCA Seal. The ratings shown are based on tests and procedures performed in accordance with AMCA Publication 211 and AMCA Publication 311 and comply with the requirements of the AMCA Certified Ratings Program. Check the AMCA Certified and Listed Product Search for our products.

Byggvarubedömningen

This product complies with Byggvarubedömningen, a Swedish certification that evaluates construction products based on their environmental and health impacts throughout their life cycle. It supports sustainable building by guiding responsible material choices.

Ecodesign (ErP) compliant

Complies with stringent EU regulations on energy labelling and Ecodesign for Sustainable Products (ESPR) and Energy-related Products (ErP). Ready to meet future requirements.

Eco Platform: EPD Verified

This product comes with an Environmental Product Declaration (EPD), published by EPD Norway, a global EPD program operator and member of the ECO Platform. Compliant with ISO 14025 and EN 15804, Systemair EPDs support Life Cycle Assessments (LCAs) in all markets where the product is used. Scroll down to download the EPDs.

Features

Construction

Casing made of **galvanised sheet steel**, corrosion **class C3** is fully **air tight class C** according to EN1751. The fans are equipped with an external **terminal box with** protection class **IP55**.

Impeller

K fans use backward curved **radial** impellers. These are from lightweight, hard-wearing fiberglass reinforced **polyamide**, dynamically **balanced** and paired with corresponding external rotor motors.

Motor

Depending on type, K fans are equipped with **AC** or high efficient **EC** external rotor motors. All motors are suitable for **50Hz** and **60Hz**.

Motor protection

Fans with **AC** motors have **integrated** thermal protection with manual (electrical) reset. Size 100 and 125 has an impedance motor protection.
Fans with **EC** motors have an **integrated** electronic **thermal protection** including **locked-rotor protection** and **soft-start**.

Control

EC motor with **built-in potentiometer** to adjust working point can be also controlled by external **signal 0-10V.**
AC motor can be controlled by **5-step** or **stepless** speed regulator.

Installation

K fans can be installed in **any** position **indoor** and **outdoor** by included **mounting brackets** .
All models have a spigot with 25 mm length which is perfectly designed to connect circular duct by **fast clamps preventing vibration** to the duct.
Installation can be combined with filter boxes, sound attenuators, and other mechanical accessories from recommended list.

Technical parameters

Nominal data		
Voltage (nominal)	230	V
Frequency	60	Hz
Phases	1~	
Input power	234	W
Input power kW	0.234	kW
Input current	1.022	A
Impeller speed	2852	rpm
Air flow	max. 1,114	m^3/h
Capacitance of capacitor	5	µF
Temperature of transported air	max. 70	°C
Max temperature of transported air, when speed controlled	70	°C
Motor power	L	

Sound data		
Sound pressure level at 3m (20m^2 Sabin)	45	dB(A)

Protection/Classification		
Enclosure class, motor	IP44	
Insulation class	F	

Data according to ErP		
ErP ready	ErP 2018;ErP 2016	

Dimensions and weights		
Duct dimension; Circular, inlet	250	mm
Duct dimension; Circular, outlet	250	mm
Weight	4.6	kg

Others		
Duct connection type	Circular	
Motor type	AC	

Performance

Performance curve

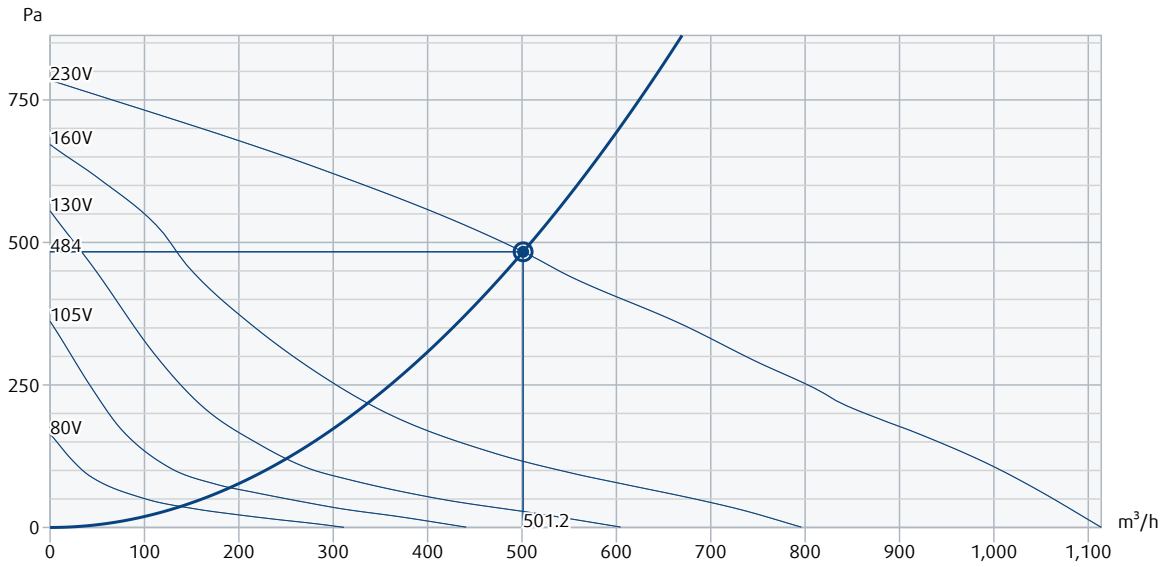

Hydraulic data	
Required air flow	501 m^3/h
Required static pressure	484 Pa
Working air flow	501 m^3/h
Working static pressure	484 Pa
Air density	1.204 kg/m^3
Power	221.2 W
Fan control - RPM	2,949 rpm
Current	0.97 A
SFP	1.589 $kW/m^3/s$
Supply voltage	230 V

Sound power level		63	125	250	500	1k	2k	4k	8k	Total
Inlet	dB(A)	61	63	67	64	65	62	57	50	72
Outlet	dB(A)	61	64	62	64	65	64	58	51	72
Surrounding	dB(A)	39	36	43	48	42	44	37	29	51
Sound pressure level at 3m (20m^2 Sabine)	dB(A)	-	-	-	-	-	-	-	-	44
Sound pressure level at 3m free field	dB(A)	-	-	-	-	-	-	-	-	30

AMCA Certified Rating statements
• AMCA Worldwide Certified Ratings: Sound and Air Performance
• Catalogue Version: 2025-02
• Performance certified is for installation type D – Ducted inlet, Ducted outlet.
• The sound power level ratings shown are in decibels, referred to 10^-12 watts, calculated per AMCA Standard 301.
• The A-weighted sound power ratings shown have been calculated per AMCA Standard 301.
• Sound pressure level at 3m (20m3 Sabin) dB(A) & Sounds pressure level at 3m free field dB(A) are not licensed by AMCA International.
• Surrounding dB(A) is not licensed by AMCA International.
• Ratings include the effects of duct end correction.
• Values shown are for inlet dB(A) sound power levels for Installation Type D: ducted inlet, ducted outlet.
• Only full speed is certified data.

Ecodesign

Product		
Trade name	Systemair	
Product name	K 250 L Sileo	

Ecodesign		
ErP compliance	2016	
Unit category	NRVU	
Drive	External MSD or VSD	
Unit type	UVU	
Heat recovery type	None	
Temperature ratio (UVU)	Not applicable	
qv nom	0.135	m^3/s
P nom	0.198	kW
Ps nom	414	Pa
Fan efficiency	28	%
External Leakage	0	%
Sound power (LWA)	45	dB(A)

Basic unit		
ErP compliance	2018	
Unit category	NRVU	
Unit type	UVU	
Drive	External MSD or VSD	
Heat recovery type	None	
Temperature ratio (UVU)	Not applicable	
qv max	900	m^3/h
P max	148	W
Sound power (LWA)	40	dB(A)
qv ref	0.175	m^3/s
Ps ref	50	Pa
SPI	0.208	$W/(m^3/h)$
CTRL	0.65	
MISC	1.1	
x-value	1.5	
AEC average	280	kWh
AEC cold	280	kWh
AEC warm	280	kWh
AHS Average	17	kWh/a
AHS Cold	34	kWh/a
AHS Warm	8	kWh/a

Dimension

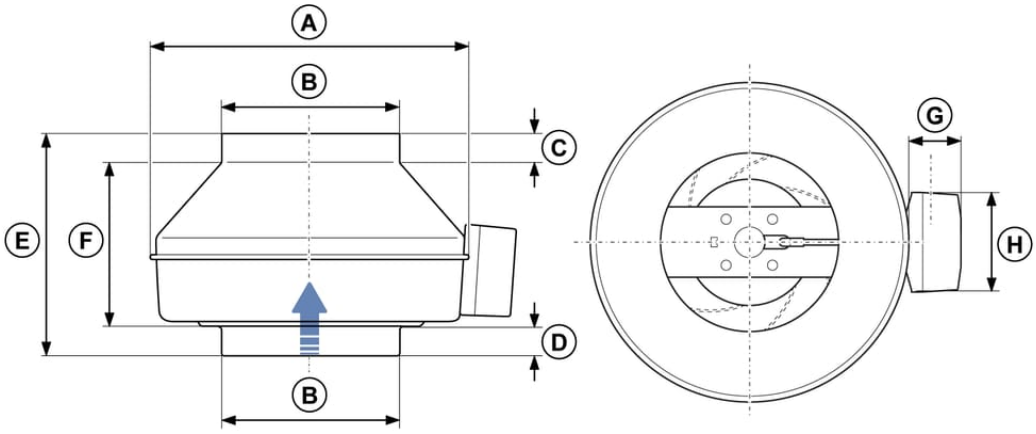

ØA	ØB	C	D	E	F	G	H
336	249	27	30.5	202	144.5	40	88

Wiring

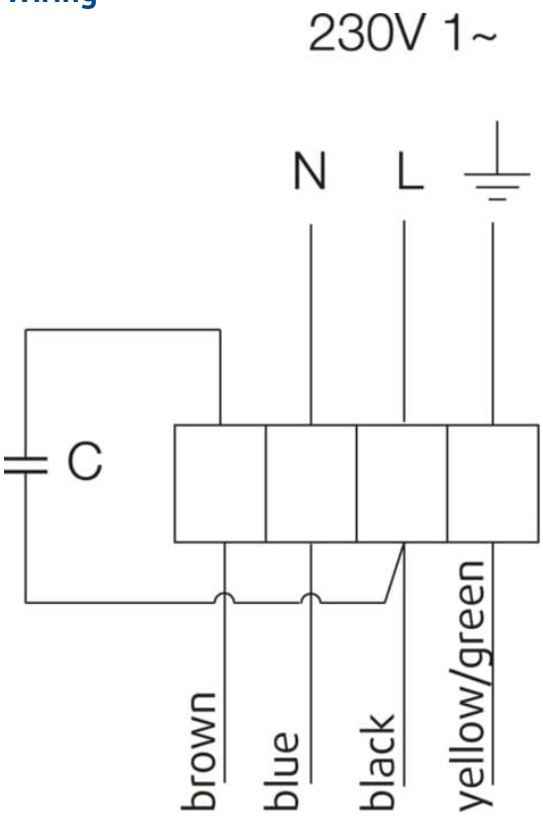

Accessories

- CB 250-3,0 230V/1 Duct heater (5385)
- CB 250-9,0 400V/3 Duct heater (5373)
- CBMF 250-6,0 400V/2 Duct heate (12249)
- DTV500A (96807)
- FGR 250 Filter cassette (1815)
- Frequency convert FRQ5SE-6A (37421)
- HR1 Room Humidistat (215150)
- Presence detector/IR24-P (6995)
- REE 1 Speed control (5314)
- RETP 6 Temp/Pressure regulator (32293)
- REV-3POL/03-7,5kW R/Y (33978)
- RSK-250 Back draft damper (5603)
- Safety switch 2-pole grey (210679)
- T 120 Timer (5165)
- VBC 250-3 Water heating batt (9843)
- VK-25 Louvre shutter (5640)
- X-CBMF 250-3,0 230V/1 Duct hea (12248)
- CB 250-6,0 400V/2 Duct heater (5372)
- CBM 250-6,0 400V/2 Duct heater (9089)
- CWK 250-3-2,5 Duct cooler,circ (30024)
- FFR 250 Filter cassette (1776)
- FK 250 Fast clamp (1612)
- Frequency converter FRQSE-6A (37419)
- LDC 250-900 Silencer (5196)
- RE 1,5 Speed control* (5000)
- REPT 6 Digital regulator (5698)
- REU 1.5 Speed control (5004)
- Room hygrostat HR-S (286251)
- RT 0-30 Room Thermostat (5151)
- SG 250 Protection guard (5610)
- VBC 250-2 Water heating batt (5460)
- VBF 250 Water heating battery (1733)
- VKK-250 Back draft damper (1627)

Documents

- COMMISSIONING_RECORD_FANS__EN_002.PDF
- EPD_728857_Systemair_K_100_M_sileo__json
- EPD_728857_Systemair_K_100_M_sileo__pdf
- INSTALLATION__OPERATION_AND_MAINTENANCE_INSTRUCTION_K__KV__PRIO__EN_003.PDF
- K fan mounting.wmv