

Electronically operated expansion valves, TQ, PHTQ

REFRIGERATION AND
AIR CONDITIONING

Technical leaflet

Introduction



TQ and PHTQ is electronically operated expansion valves designed for refrigerating systems. The TQ/PHTQ valves are normally controlled by a controller from the Danfoss' range of ADAP-KOOL®- Refrigeration control system.

The TQ/PHTQ valves consists of four main components:

- Orifice assembly
- Valve body
- Actuator
- Flanges

The individual capacities are indicated with a number forming part of the type designation. The number represents the size of the orifice of the valve in question. A valve with orifice 3 will for example be designated TQ 5-3.
The orifice assembly is replaceable.

The TQ/PHTQ valves covers a capacity range from 15 kW to 2200 kW (R22) for each evaporator.

TQ/PHTQ can be used with advantage for finned evaporators and liquid coolers designed for dry evaporation.

The main function is to control the liquid supply to evaporators with dry evaporation, in for example:

- Air coolers
- Liquid coolers
- Heat pump plant
- Air conditioning plant
- Marine refrigeration plant

Features

- The system is not affected by changes in condensing pressure
- The system compensates for changes in subcooling ahead of the expansion valve
- The system adjusts itself quickly and precisely even to large load changes
- Low superheat gives maximum utilization of the evaporator

© Danfoss A/S (RC-CMS/HKL), 07 - 2005

Technical data

Expansion valve type TQ/PHTQ

Refrigerant	R22, R134a, R404A/R507 [1]
Range	–40 to +10°C [2]
Test pressure	Max. 26.5 bar
Operating pressure	PS = 22 bar
Ambient temperature	Operation: max. 50°C Transport: max. 70°C

[1]) For other refrigerants, please contact Danfoss
[2]) For other ranges, please contact Danfoss

Actuator

Ambient temperature	Operation: –30 to +60°C Transport: –30 to +70°C
Voltage supply	24 V pulsating a.c. Consumption – operation 50 VA – start 75 VA
Enclosure	IP 55 to IEC 529 with cap fitted
Screwed cable entry	Pg 13.5

Example, sizing and ordering

Refrigerant: R22
Valve connection: solder straightway
Evaporator capacity: Q_e = 50 kW
Evaporating temperature: t_e = –10°C
(p_e = 3.6 bar gauge pressure)
Condensing temperature t_c = 36°C
(p_c = 14.1 bar gauge pressure)
Subcooling = 10 K
Evaporator placed 6 m higher than receiver

Evaporating pressure p_e to be subtracted from condensing pressure p_c
$p_c - p_e = 14.1 - 3.6 = 10.5$ bar

To determine the actual pressure drop across the expansion valve, a series of other pressure drops must be considered in addition to $p_c - p_e$:

1. Pressure drop Δp_1 in liquid line:
   $\Delta p_1 \approx 0.1$ bar

2. Assumed pressure drop Δp_2 in filter drier, sight glass, manual shut-off valve and pipe bends,
   $\Delta p_2 \approx 0.2$ bar

3. Pressure drop Δp_3 in vertical liquid line (because of height difference h = 6 m), see table below,
   $\Delta p_3 = 0.7$ bar

Refrigerant	Static pressure drop, Δp_3 bar at height difference h between evaporator and receiver				
	6 m	12 m	18 m	24 m	30 m
R22	0.7	1.4	2.1	2.8	3.5
R134a	0.7	1.4	2.1	2.8	3.6
R404A	0.6	1.3	1.9	2.5	3.2
R507	0.6	1.3	1.9	2.5	3.2

4. Pressure drop Δp_4 in liquid distributor,
   $\Delta p_4 \approx 0.5$ bar

5. Pressure drop Δp_5 in distributor tubes,
   $\Delta p_5 \approx 0.5$ bar

Total pressure drop across expansion valve
$\Delta p = (p_c - p_e) - (\Delta p_1 + \Delta p_2 + \Delta p_3 + \Delta p_4 + \Delta p_5)$
$\Delta p \approx 10.5 - (0.1 + 0.2 + 0.7 + 0.5 + 0.5)$
$\Delta p \approx 10.5 - 2.0$
$\Delta p \approx 8.5$ bar

Correction factor k
When sizing, the evaporator capacity must be multiplied by a correction factor k, depending on refrigerant subcooling Δt_s ahead of the expansion valve.

Δt_s K	0	4	10	20	30	40
k	1.11	1.00	0.91	0.80	0.74	0.69

Correction factor for 10 K subcooling = 0.91.

Corrected evaporator capacity = 50 × 0.91 = 45.5 kW.

The capacity table shows that a TQ 20-2 is suitable.

Ordering
Orifice assembly = **068F2034**
Valve body = **068B4021**
Actuator = **068F3207**

TQ 20-3, $^7/_8 \times 1^1/_8$ in. solder connection

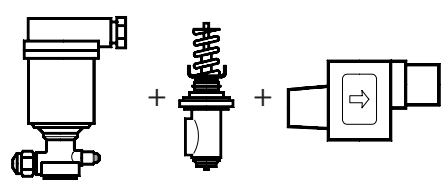

068F3207 *table 3* | **068F2034** *table 1* | **068B4021** *table 2*

Ordering

The valve consists of four main components that must be ordered separately
1. Orifice assembly
2. Valve body
3. Actuator
4. Flanges if applicable (TQ 20 available fitted with flanges, see code no.)

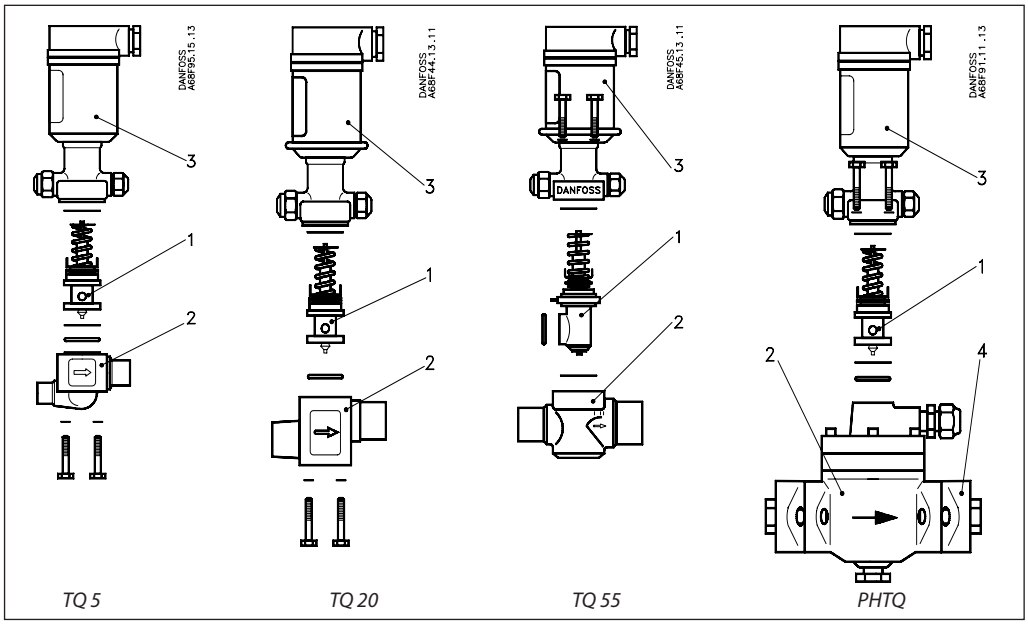

TQ 5 *TQ 20* *TQ 55* *PHTQ*

1. Orifice assembly [1]

Symbol	Valve type	Capacity [2] Tons (TR) R22	Tons (TR) R134a	Tons (TR) R404A/R507	kW R22	kW R134a	kW R404A/R507	Orifice no.	Orifice assembly **Code no.**
	TQ 5-1	4.1	3.1	3.1	14.5	10.8	11	1	**068F2041**
	TQ 5-2	6.8	5.1	4.9	24	18.0	17.6	2	**068F2042**
	TQ 5-3	8.5	7.4	7.4	30	26.4	26.4	3	**068F2043**
	TQ 20-1	10.8	7.9	8.3	38	27.6	29.7	1	**068F2033**
	TQ 20-2	17.3	12.6	13.3	61	44.4	47.3	2	**068F2034**
	TQ 20-3	25.3	18.3	19.6	89	64.8	68.2	3	**068F2035**
	TQ 20-4	33.9	23.8	25.4	119	84.0	89.1	4	**068F2036**
	TQ 20-5	37.9	27.2	29.1	133	96.0	102	5	**068F2037**
	TQ 55-0.3	23.4	15.1	18.0	82	63.0	63.6	0.3	**068F2045**
	TQ 55-0.5	39-0	25.3	30.1	137	106	106	0.5	**068F2046**
	TQ 55-0.7	54.6	35.4	42.1	192	149	148	0.7	**068F2047**
	TQ 55-1	78.1	60.7	60.2	275	213	212	1	**068F2048**
	TQ 55-2	114.7	87.9	87.8	404	309	310	2	**068F2049**

Symbol	Valve type	Capacity [2] Tons (TR) R22	Tons (TR) R134a	Tons (TR) R404A/R507	kW R22	kW R134a	kW R404A/R507	Pilot orifice **Code no.**
	PHTQ 85-1	41.1	32	31.5	145	112	111	**068F2041**
	PHTQ 85-2	61.3	47.7	47.3	216	168	167	**068F2041**
	PHTQ 85-3	100.8	76.6	77.6	355	270	273	**068F2041**
	PHTQ 85-4	173.8	132	133	612	465	469	**068F2041**
	PHTQ 125-1	243.4	185	186	857	654	657	**068F2041**
	PHTQ 300-1	399.3	304	306	1406	1071	1079	**068F2041**
	PHTQ 300-2	618.7	468	474	2179	1650	1669	**068F2041**

[1] To ensure a correct supply of refrigerant there must be external pressure equalization from the actuator to the valve outlet

[2] Capacities are based on an evaporating temperature t_e = +5°C, a condensing temperature t_c = +32°C and a liquid temperature ahead of valve t_l = +28°C

© Danfoss A/S (RC-CMS/HKL), 07 - 2005

Ordering *(continued)*
Expansion valve
TQ/PHTQ

2. Valve body

Symbol	Valve type	Orifice assembly no.	Connection		Code no.				
			in.	mm	Angleway flare x flare	Angleway ODF x ODF	Straightway ODF x ODF	Flange ODF x ODF	PHT
	TQ 5	1-2	$^1/_2 \times ^5/_8$		**068B4013**	**068B4009**	**068B4007**		
				12 x 16	**068B4013**	**068B4004**	**068B4002**		
		1-3	$^1/_2 \times ^5/_8$		**068B4013**				
				12 x 16	**068B4013**				
			$^1/_2 \times ^7/_8$			**068B4010**	**068B4008**		
				12 x 22		**068B4005**	**068B4003**		
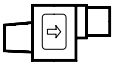	TQ 20	1-2	$^5/_8 \times ^7/_8$			**068B4022**	**068B4020**	**068B4025** [3]	
				16 x 22			**068B4018**	**068B4027** [3]	
			$^7/_8 \times 1$					**068B4026** [3]	
				22 x 25				**068B4015** [3]	
		1-5		22 x 28		**068B4017** [1]	**068B4016** [1]		
			$^7/_8 \times 1^1/_8$			**068B4023** [1]	**068B4021** [1]		
	TQ 55	0.3-2	$1^1/_8 \times 1^3/_8$			**068G4004** [2]	**068G4003** [2]		
				28 x 35		**068G4002** [2]	**068G4001** [2]		
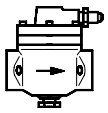	PHTQ 85	1	[4]						**026H1160**
		2	[4]						**026H1161**
		3	[4]						**026H1162**
		4	[4]						**026H1163**
	PHTQ 125	1	[4]						**026H1164**
	PHTQ 300	1	[4]						**026H0165**
		2	[4]						**026H0166**

1) ODF x ODM
2) ODM x OMD
3) Valve body with flanges
4) Flanges

ODF = internal diameter
ODM = external diameter

3. Actuator

	Valve type	Code no.
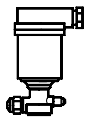	TQ 5 solder	**068F3211**
	TQ 5 flare	**068F3209**
	TQ 20 flare [1]	**068F3207**
	TQ 55 flare [1]	**068F3208**
	PHTQ solder	**068F3212**
	PHTQ flare	**068F3205**
	Adapter for solder connection [1]	**068B0170**

1) Actuator with solder connection, please order an adaptor for solder connection, **code no. 068B0170**

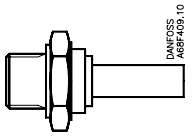

Adapter for solder connection of $^1/_4$ in. Cu-tube

4. Flanges

	Valve type	Connection		Code no.	
		in.	mm	Weld	Solder
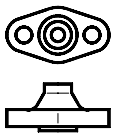	PHTQ 85	1		**027N1025**	
	PHTQ 85	$1^1/_8$			**027L1029**
	PHTQ 85		28		**027L1028**
	PHTQ 85	$1^3/_8$	35		**027L1035**
	PHTQ 125	$1^1/_4$		**027N1032**	
	PHTQ 300-1	$1^1/_2$		**027N1040**	
	PHTQ 300-2	2		**027N1050**	

Capacity in kW

Range –40 → +10°C

R22

Type	Capacity in kW at pressure drop across valve Δp bar							
	2	4	6	8	10	12	14	16
TQ 5-1	10	13	14	16	16	17	17	18
TQ 5-2	16	20	23	25	26	27	28	28
TQ 5-3	23	28	32	35	37	38	39	40
TQ 20-1	24	32	37	40	43	44	45	46
TQ 20-2	39	52	59	64	68	70	72	73
TQ 20-3	58	76	86	93	98	102	104	106
TQ 20-4	75	99	113	122	128	133	136	138
TQ 20-5	88	114	129	139	146	152	155	158
TQ 55-0,3	55	70	80	87	92	95	98	98
TQ 55-0,5	92	117	133	145	153	159	163	164
TQ 55-0,7	128	164	187	203	215	223	228	230
TQ 55-1	183	235	267	290	307	318	325	328
TQ 55-2	269	340	386	419	443	460	465	467
PHTQ 85-1	96	125	143	155	164	170	174	176
PHTQ 85-2	144	185	210	229	242	251	256	259
PHTQ 85-3	237	301	341	371	392	407	415	419
PHTQ 85-4	408	510	577	627	663	689	703	709
PHTQ 125-1	571	718	813	884	934	970	991	1000
PHTQ 300-1	937	1177	1332	1448	1531	1589	1623	1638
PHTQ 300-2	1455	1812	2049	2228	2356	2446	2497	2517

Range –30 → +25°C

R134a

Type	Capacity in kW at pressure drop across valve Δp bar							
	2	4	6	8	10	12	14	16
TQ 5-1	8	11	12	12	13	13	12	12
TQ 5-2	13	17	19	19	20	20	19	19
TQ 5-3	19	24	26	28	28	28	28	28
TQ 20-1	22	28	31	32	34	34	34	32
TQ 20-2	35	43	48	50	53	53	53	53
TQ 20-3	52	64	71	74	77	78	77	76
TQ 20-4	67	82	91	91	100	101	100	98
TQ 20-5	76	94	104	109	113	114	114	112
TQ 55-0,3	47	59	66	70	71	70	70	69
TQ 55-0,5	78	99	110	116	117	117	117	115
TQ 55-0,7	110	139	155	162	165	164	163	161
TQ 55-1	157	198	221	232	235	234	233	230
TQ 55-2	228	284	317	332	332	329	325	322
PHTQ 85-1	84	107	119	125	127	126	126	125
PHTQ 85-2	124	156	174	184	186	185	184	182
PHTQ 85-3	202	252	281	294	299	298	295	293
PHTQ 85-4	341	425	472	493	498	496	494	492
PHTQ 125-1	480	599	666	698	707	704	700	695
PHTQ 300-1	786	980	1091	1142	1157	1153	1145	1138
PHTQ 300-2	1208	1505	1672	1746	1764	1758	1750	1744

Correction factor

Correction for subcooling Δt_{sub}

The evaporator capacity used must be corrected if subcooling deviates from 4 K.

The evaporator capacity must be multiplied by a correction factor for subcooling.

Δt_{sub} K	4	10	20	30	40
R22, R134a	1.00	0.95	0.83	0.77	0.71

© Danfoss A/S (RC-CMS/HKL), 07 - 2005

Capacity in kW

Range –40 → +10°C

R404A/R507

Type	Capacity in kW at pressure drop across valve Δp bar							
	2	4	6	8	10	12	14	16
TQ 5-1	8	10	11	12	12	12	13	12
TQ 5-2	13	16	17	18	19	19	19	19
TQ 5-3	18	23	25	27	27	28	28	27
TQ 20-1	18	24	28	29	30	31	31	30
TQ 20-2	30	39	43	46	47	49	49	47
TQ 20-3	44	57	64	68	70	72	72	70
TQ 20-4	58	76	85	90	93	94	94	93
TQ 20-5	68	88	98	103	106	108	108	106
TQ 55-0,3	45	57	63	67	68	70	70	69
TQ 55-0,5	75	95	105	111	114	116	116	115
TQ 55-0,7	105	136	147	155	160	162	163	161
TQ 55-1	150	190	210	222	228	232	233	230
TQ 55-2	222	277	305	320	330	335	332	325
PHTQ 85-1	78	101	112	118	122	124	125	123
PHTQ 85-2	117	149	165	175	180	183	184	182
PHTQ 85-3	195	245	269	283	292	296	297	293
PHTQ 85-4	340	416	454	476	490	500	502	495
PHTQ 125-1	473	586	642	673	693	705	708	699
PHTQ 300-1	777	961	1050	1101	1134	1155	1160	1145
PHTQ 300-2	1213	1480	1611	1688	1740	1773	1783	1760

Range -40 → +10°C

R407C

Type	Capacity in kW at pressure drop across valve Δp bar							
	2	4	6	8	10	12	14	16
TQ 5-1	11	14	15	16	16	17	17	17
TQ 5-2	17	21	24	26	27	27	28	27
TQ 5-3	24	29	33	36	38	38	39	39
TQ 20-1	25	34	38	41	44	44	45	45
TQ 20-2	41	55	61	66	69	70	71	71
TQ 20-3	61	80	89	96	100	102	103	103
TQ 20-4	80	104	118	126	131	133	135	134
TQ 20-5	93	120	134	143	149	152	153	153
TQ 55-0.3	58	74	83	90	94	95	97	95
TQ 55-0.5	98	123	138	149	156	159	161	159
TQ 55-0.7	136	172	194	209	219	223	226	223
TQ 55-1	194	247	278	299	313	318	322	318
TQ 55-2	285	357	401	432	452	460	460	453
PHTQ 85-1	102	131	149	160	167	170	172	171
PHTQ 85-2	153	194	218	236	247	251	253	251
PHTQ 85-3	251	316	355	382	400	407	411	406
PHTQ 85-4	432	536	600	646	676	689	696	688
PHTQ 125-1	605	754	846	911	953	970	981	970
PHTQ 300-1	993	1236	1385	1491	1562	1589	1607	1589
PHTQ 300-2	1542	1903	2131	2295	2403	2446	2472	2441

Correction factor

Correction for subcooling Δt_{sub}
The evaporator capacity used must be corrected if subcooling deviates from 4 K.

The evaporator capacity must be multiplied by a correction factor for subcooling.

Δt_{sub} K	4	10	20	30	40
R404A/R507, R407C	1.00	0.95	0.83	0.77	0.71

© Danfoss A/S (RC-CMS/HKL), 07 - 2005

Design
Function

1. Cover
2. Screw
3. Gasket
4. Cable
5. O-ring
6. Stop screw
7. Valve top
8. Screw
9. Cable shoe
10. Screwed cable entry Pg 13.5
11. Seal ring
12. Gasket
13. Gasket
14. Terminal board
15. Cap
16. NTC sensor
17. PTC heat element
18. Orifice assembly
19. Valve body
20. Top cover
21. Flanges
22. Seal plug

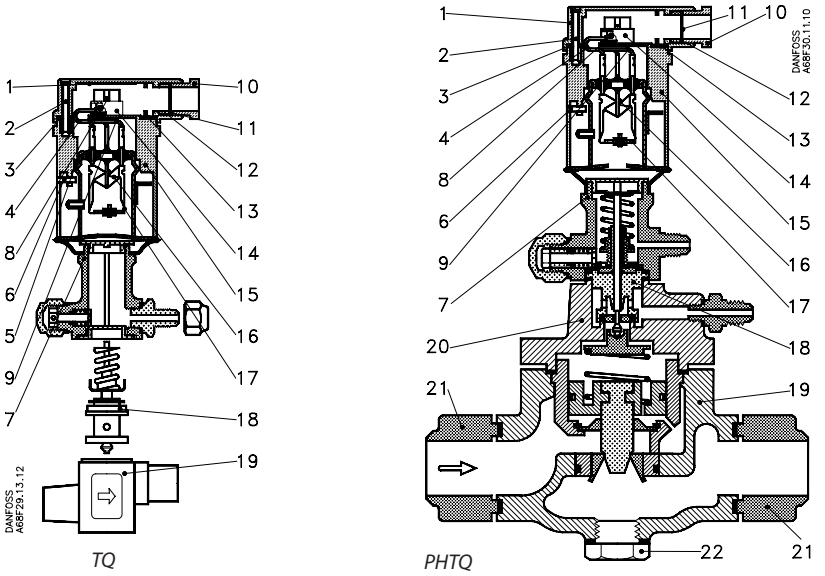

Application example

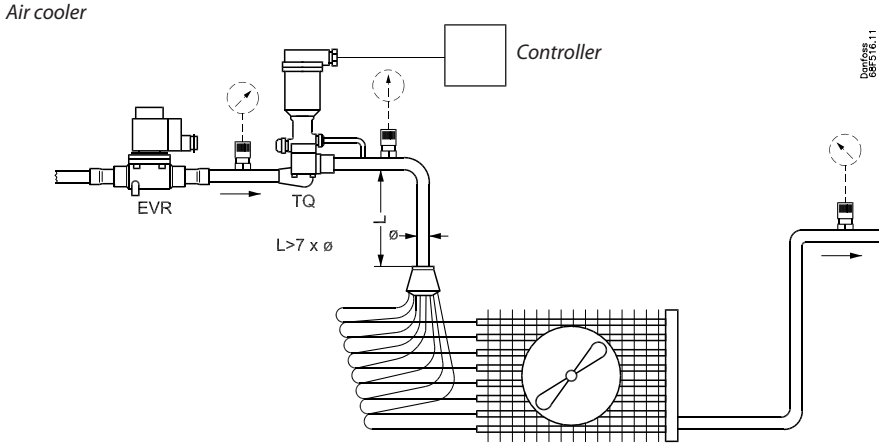

A solenoid valve EVR ahead of valve TQ is recommended to obtain improved shut-off during standstill.

The pressure equalising line must be connected just after valve TQ / PHTQ, between valve and distributor.

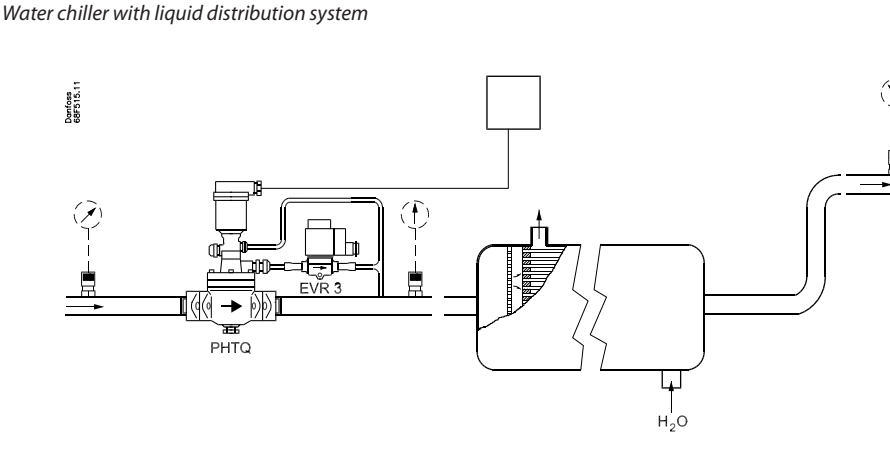

The pressure equalisation line is connected to the expansion line right after the expansion valve.

The relief line (PHTQ only) must be connected immediately after valve PHTQ.

© Danfoss A/S (RC-CMS/HKL), 07 - 2005

Dimensions and weights

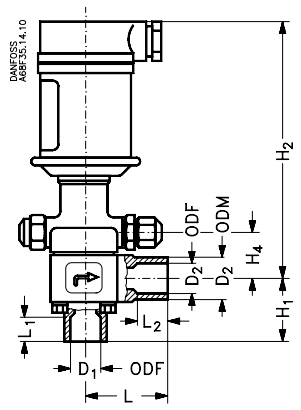

TQ 5

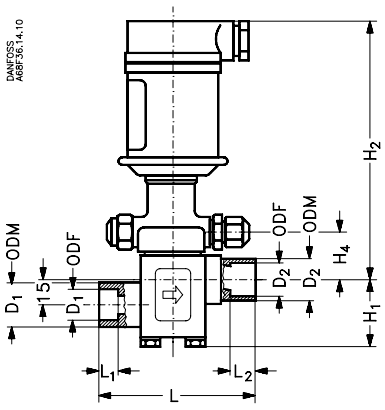

TQ 20

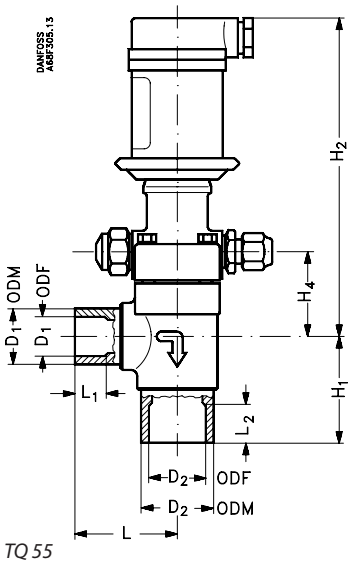

TQ 55

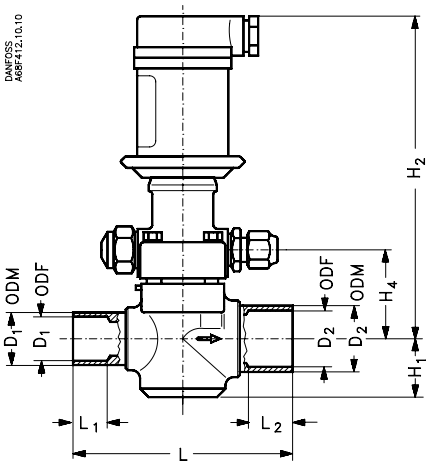

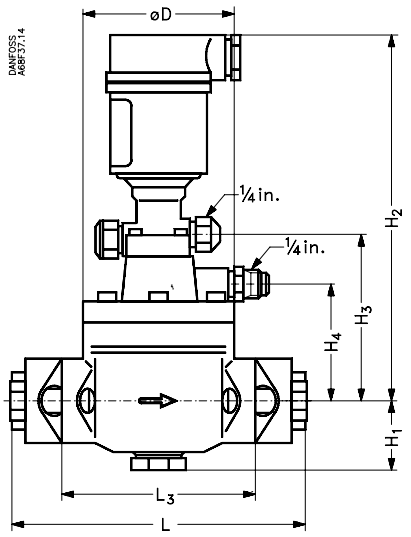

PHTQ

Type	Inlet		Outlet	
	D_1	L_1 mm	D_2	L_2 mm
TQ 5	1/2 in./12 mm ODF	10	5/8 in./16 mm ODF	12
	1/2 in./16 mm ODF	10	7/8 in./22 mm ODF	17
TQ 20	5/8 in./16 mm ODF	12	7/8 in./22 mm ODF	17
	7/8 in./22 mm ODF	17	1 1/8 in./28 mm ODM	25
TQ 55	7/8 in./22 mm ODF	17	1 1/8 in./28 mm ODF	22
	1 1/8 in./28 mm ODM	25	1 3/8 in./35 mm ODM	27

Type	Connection	H_1 mm	H_2 mm	H_3 mm	H_4 mm	L mm	L_3 mm	∅D mm	Weight kg
TQ 5	Angleway, flare	50	156		32	55			1.1
	Angleway, solder	28	158		32	40			1.0
	Straightway, solder	27	158		32	74			1.0
TQ 20	Flanges, solder	33	182		38	115			2.1
	Straightway, solder	38	173		29	97			1.7
	Angleway, solder	40	173		29	52			1.5
TQ 55	Straightway, solder	31	184		41	109			1.7
	Angleway, solder	53	184		41	51			1.6
PHTQ 85	Flanges	45	235	107	75	190	115	92	5.6
PHTQ 125	Flanges	56	245	126	94	205	144	113	9.3
PHTQ 300	Flanges	65	267	142	110	255	180	133	15.0

© Danfoss A/S (RC-CMS/HKL), 07 - 2005

© Danfoss A/S (RC-CMS/HKL), 07 - 2005

Danfoss can accept no responsibility for possible errors in catalogues, brochures and other printed material. Danfoss reserves the right to alter its products without notice. This also applies to products already on order provided that such alterations can be made without subsequential changes being necessary in specifications already agreed.
All trademarks in this material are property of the respective companies. Danfoss and the Danfoss logotype are trademarks of Danfoss A/S. All rights reserved.

© Danfoss A/S (RC-CMS/HKL), 07 - 2005