T-Series (TCLE / TJRE / TERE / TIRE / THRE)

Thermo-expansion valve

General information

A1 A2L

Take-a-part Thermo™-Expansion Valves are designed for air conditioning, chillers, rooftops, close control, A/C transportation, heat pumps, industrial cooling process, refrigeration and numerous special applications.

T-Series valves are ideal for those applications requiring flexibility in selection of capacity and excellent stable superheat control under varying operating conditions such as high and low head pressure, wide load variation and partial load down to 25%.



TCLE

Features

- Modular design for economical logistics and easy assembly and servicing
- Combinations of different charges with various orifice springs cover a very large application range
- XB power element with a long-life laser welded stainless steel head resists corrosion
- Large diaphragm eliminates disturbances to the valve and provides smoother and consistent valve control over wide range of operation
- High-quality materials and processes for high reliability and long lifetime
- Constant superheat across a wide application range
- Superior partial load performance due to double seat orifice design (TJRE, TERE, TIRE & THRE)
- Bi-flow capability for applications in heat pumps
- Flanges: brazing ODF/ODM connection with straight through and angle style configuration
- For maintenance no loosen the pipes connections are necessary, due there are no operationally relevant parts inside the flange
- Max. allowable pressure PS:
  - 46 bar with XB Power assembly
  - 31 bar with XC Power assembly

TAKE-APART DESIGN

T valves consists of 3 main assembly parts:

Valve Series	Power element	Orifice	Flange	
			 Angle	 Straight through
TCLE	XB1019...-1B XB1019...-2B	X22440-B…B	C501-5/ C501-5mm C501-7 / C501-7mm A576 / A576-mm	9761-3 / 9761-3mm 9761-4 / 9761-4mm 6346-17
TJRE		X11873-B…B	10331	10332
TERE	XC726...-2B XC726...-4B	X9117-B…B	9153 / 9153-mm	9152 / 9152-mm
TIRE		X9166-B10B		
THRE		X9144-B…B	9149	9148

Each part can be selected individually and combined according to the system requirements by following of 3 selection steps.

Step 1: Single Selection Orifice according required Capacity

			Capacity (kW)							A1	Power element
Refrigerant Charge Code:			MW				SW				
Valve Type	Orifice Type	Orifice Part No.	Capacity code	R134a	R513A*	R450A*	Capacity code	R404A R507	R452A*		
TCLE	X22440-B1B	803210	25MW	1.5	1.3	1.3	25SW	1.3	1.4		XB 1019 …
	X22440-B2B	803211	75MW	2.9	2.6	2.5	75SW	2.6	2.8		
	X22440-B3B	803212	150MW	6.1	5.5	5.4	150SW	5.6	6.0		
	X22440-B3.5B	803462	200MW	9.3	8.3	8.1	200SW	8.4	9.0		
	X22440-B4B	803213	250MW	13.5	12.1	11.8	250SW	12.2	13.1		
	X22440-B5B	803214	350MW	17.3	15.5	15.1	400SW	15.7	16.8		
	X22440-B6B	803215	550MW	23.6	21.2	20.7	600SW	21.5	23.0		
	X22440-B7B	803216	750MW	32.0	28.7	28	850SW	29.0	31.1		
	X22440-B8B	803217	900MW	37.2	33.4	32.6	1000SW	33.8	36.2		
TJRE	X11873-B4B	803348	11MW	45	40.5	39.6	12SW	40	43.9		
	X11873-B5B	803349	13MW	57	51.7	50.5	14SW	51	56.0		
TERE	X9117-B6B	803341	16MW	71	63.5	62.1	18SW	63	68.9		XC 726 …
	X9117-B7B	803342	19MW	81	72.6	70.9	20SW	72	78.7		
	X9117-B8B	803343	25MW	112	99.8	97.5	27SW	99	108		
	X9117-B9B	803344	31MW	135	122	119	34SW	120	132		
TIRE	X9166-B10B	803347	45MW	174	156	152	47SW	154	169		
THRE	X9144-B11B	803345	55MW	197	177	173	61SW	174	192		
	X9144-B13B	803346	68MW	236	211	206	77SW	209	229		

			Capacity (kW)							A1	Power element
Refrigerant Charge Code:			NW		ZW			BW			
Valve Type	Orifice Type	Orifice Part No.	Capacity code	R407C	Capacity code	R410A	Capacity code	R448A	R449A		
TCLE	X22440-B1B	803210	50NW	2.1	50ZW	2.2	55BW	1.9	1.9		XB 1019 …
	X22440-B2B	803211	100NW	4.0	100ZW	4.3	100BW	3.7	3.6		
	X22440-B3B	803212	200NW	8.5	250ZW	9.2	250BW	7.9	7.8		
	X22440-B3.5B	803462	300NW	12.9	400ZW	13.9	350BW	11.9	11.7		
	X22440-B4B	803213	400NW	18.7	600ZW	20.2	500BW	17.3	17.0		
	X22440-B5B	803214	550NW	24.0	750ZW	25.9	650BW	22.1	21.8		
	X22440-B6B	803215	750NW	32.9	1000ZW	35.5	850BW	30.3	29.9		
	X22440-B7B	803216	1000NW	44.4	1400ZW	48	1150BW	41	40.4		
	X22440-B8B	803217	1150NW	51.7	1600ZW	55.8	1350BW	47.7	47.0		
TJRE	X11873-B4B	803348	14NW	62	19ZW	67.7	17BW	57.8	57.0		
	X11873-B5B	803349	17NW	80	25ZW	86.4	21BW	73.8	72.8		
TERE	X9117-B6B	803341	21NW	99		-	26BW	90.7	89.5		XC 726 …
	X9117-B7B	803342	25NW	112		-	30BW	104	102		
	X9117-B8B	803343	33NW	155		-	41BW	143	141		
	X9117-B9B	803344	42NW	188		-	50BW	174	171		
TIRE	X9166-B10B	803347	52NW	241		-	64BW	222	219		
THRE	X9144-B11B	803345	71NW	273		-	72BW	252	249		
	X9144-B13B	803346	94NW	327		-	86BW	301	297		

Step 1: Single Selection Orifice according required Capacity

			Capacity (kW) A2L										Power element
Refrigerant Charge Code:			MW			NW		ZW		BW			
Valve Type	Orifice Type	Orifice Part No.	Capacity code	R1234ze*	R1234yf*	Capacity code	R454C*	Capacity code	R32*	Capacity code	R454A*	R455A*	
TCLE	X22440-B1B	803210	25MW	1.1	1.1	50NW	1.6	50ZW	3.3	55BW	1.8	1.8	XB 1019 …
	X22440-B2B	803211	75MW	2.1	2.2	100NW	3.0	100ZW	6.4	100BW	3.5	3.5	
	X22440-B3B	803212	150MW	4.4	4.8	200NW	6.5	250ZW	13.7	250BW	7.5	7.5	
	X22440-B3.5B	803462	200MW	6.6	7.2	300NW	9.7	400ZW	20.7	350BW	11.3	11.3	
	X22440-B4B	803213	250MW	9.6	10.5	400NW	14.2	600ZW	30.0	500BW	16.4	16.5	
	X22440-B5B	803214	350MW	12.4	13.4	550NW	18.2	750ZW	38.5	650BW	21.0	21.1	
	X22440-B6B	803215	550MW	17.0	18.4	750NW	24.9	1000ZW	52.8	850BW	28.8	28.9	
	X22440-B7B	803216	750MW	22.9	24.8	1000NW	33.6	1400ZW	71.4	1150BW	38.9	39.1	
	X22440-B8B	803217	900MW	26.7	28.9	1150NW	39.1	1600ZW	83.0	1350BW	45.3	45.5	
TJRE	X11873-B4B	803348	11MW	32.3	35.1	14NW	47.4	19ZW	100.7	17BW	54.9	55.2	
	X11873-B5B	803349	13MW	41.3	44.7	17NW	60.5	25ZW	128.5	21BW	70.1	70.4	
TERE	X9117-B6B	803341	16MW	50.7	55	21NW	74.4		-	26BW	86.2	86.6	XC 726 …
	X9117-B7B	803342	19MW	58.0	62.9	25NW	85.1		-	30BW	98.5	98.9	
	X9117-B8B	803343	25MW	79.7	86.4	33NW	117		-	41BW	135	136	
	X9117-B9B	803344	31MW	97.0	105	42NW	142		-	50BW	165	166	
TIRE	X9166-B10B	803347	45MW	124	135	52NW	182		-	64BW	211	212	
THRE	X9144-B11B	803345	55MW	141	153	71NW	207		-	72BW	240	241	
	X9144-B13B	803346	68MW	168	183	94NW	247			86BW	286	287	

NOTE 1: *) Superheat readjustment required - see Operating Instruction

NOTE 2: The nominal capacities are based +4 °C evaporating temperature (dew point), +38 °C condensing temperature (bubble point) and 1 K subcooling.

NOTE 3: For other operating conditions use the "Select" tool (www.copeland.com/en-gb). For assistance with selection, please contact your local Copeland Sales offices.

Step 2: Single Selection - Power Element

Charge Code	Refrigerant		MOP Code	MOP (bar)	Evaporating Temperature	Max. allowable Pressure PS	Capillary tube length	Power Element	
	A1	A2L						Type	Part No.
MW	R134a R513A R450A	R1234ze R1234yf	-	-	-45…30 °C	46 bar	1.5 m	**XB 1019 MW-1B**	**802947**
			-	-	-45…30 °C		3.0 m	**XB 1019 MW-2B**	**803392**
			35	2.4 bar	-45...0 °C		1.5 m	**XB 1019 MW 35-1B**	**803381**
			55	3.8 bar	-45...11 °C		1.5 m	**XB 1019 MW 55-1B**	**803379**
			55	3.8 bar	-45...11 °C		3.0 m	**XB 1019 MW 55-2B**	**803439**
			-	-	-45…30 °C	31 bar	3.0 m	**XC 726 MW-2B**	**803384**
			35	2.4 bar	-45...0 °C		3.0 m	**XC 726 MW 35-2B**	**803436**
			55	3.8 bar	-45...11 °C		3.0 m	**XC 726 MW 55-2B**	**803391**
			55	3.8 bar	-45...11 °C		6.0 m	**XC 726 MW 55-4B**	**803441**
SW	R404A R507 R452A		-	-	-45…30 °C	46 bar	1.5 m	**XB 1019 SW-1B**	**803443**
			-		-45…30 °C		3.0 m	**XB 1019 SW-2B**	**800526**
			40	2.4 bar	-45…-18 °C		1.5 m	**XB 1019 SW 40-1B**	**803452**
			40	2.4 bar	-45…-18 °C		3.0 m	**XB 1019 SW 40-2B**	**803453**
			55	3.8 bar	-45…-10 °C		1.5 m	**XB 1019 SW 55-1B**	**803474**
			55	3.8 bar	-45…-10 °C		3.0 m	**XB 1019 SW 55-2B**	**803475**
			75	5.2 bar	-45…-2 °C		1.5 m	**XB 1019 SW 75-1B**	**803498**
			75	5.2 bar	-45…-2 °C		3.0 m	**XB 1019 SW 75-2B**	**803499**
			80	5.5 bar	-45…0 °C		1.5 m	**XB 1019 SW 80-1B**	**803454**
			80	5.5 bar	-45…0 °C		3.0 m	**XB 1019 SW 80-2B**	**803455**
			-	-	-45…30 °C	31 bar	3.0 m	**XC 726 SW-2B**	**803451**
			-	-	-45…30 °C		6.0 m	**XC 726 SW-4B**	**803559**
			40	2.4 bar	-45…-18 °C		3.0 m	**XC 726 SW 40-2B**	**803456**
			40	2.4 bar	-45…-18 °C		6.0 m	**XC 726 SW 40-4B**	**803493**
			55	3.8 bar	-45…-10 °C		3.0 m	**XC 726 SW 55-2B**	**803476**
			55	3.8 bar	-45…-10 °C		6.0 m	**XC 726 SW 55-4B**	**803495**
			75	5.2 bar	-45…-2 °C		3.0 m	**XC 726 SW 75-2B**	**803171**
			80	5.5 bar	-45…0 °C		3.0 m	**XC 726 SW 80-2B**	**803457**
			80	5.5 bar	-45…0 °C		6.0 m	**XC 726 SW 80-4B**	**803496**
NW	R407C	R454C			-45…30 °C	46 bar	1.5 m	**XB 1019 NW-1B**	**803480**
					-45…30 °C		3.0 m	**XB 1019 NW-2B**	**803481**
			100	6.9 bar	-45…14 °C		1.5 m	**XB 1019 NW 100-1B**	**803482**
			100	6.9 bar	-45…14 °C		3.0 m	**XB 1019 NW 100-2B**	**803483**
					-45…30 °C	31 bar	3.0 m	**XC 726 NW-2B**	**803484**
					-45…30 °C		6.0 m	**XC 726 NW-4B**	**803558**
			100	6.9 bar	-45…14 °C		3.0 m	**XC 726 NW 100-2B**	**803485**
			100	6.9 bar	-45…14 °C		6.0 m	**XC 726 NW 100-4B**	**803494**
ZW	R410A	R32	175	12.1 bar	-45…16 °C	46 bar	1.5 m	**XB 1019 ZW 175-1B**	**804824**
			175	12.1 bar	-45…16 °C		3.0 m	**XB 1019 ZW 175-2B**	**804825**
BW	R448A R449A	R454A R455A			-45…30 °C	46 bar	1.5 m	**XB 1019 BW-1B**	**802792**
			30	2.1 bar	-45…-18 °C		1.5 m	**XB 1019 BW 30-1B**	**802791**
			100		-45…12 °C		1.5 m	**XB 1019 BW 100-1B**	**802790**
					-45…30 °C	31 bar	1.5 m	**XC 726 BW-2B**	**802794**
			30	2.1 bar	-45…-18 °C		3.0 m	**XC 726 BW 30-2B**	**802793**

Type Code Power Element - e.g. XB1019-MW55-1B

X⌂⌂⌂⌂⌂ - ⌂⌂ ⌂⌂⌂ - ⌂ ⌂

Type

XB1019	Smaller capacities
	PS: max 46 bar
XC726	larger capacities
	PS: max 31 bar

Equalizer

A	internal	**B**	external

Capillary Tube Code

1	1.5 m	**2**	3.0 m	**4**	6.0 m

MOP Code

blank	Without MOP	**15…175**	MOP

Refrigerant Charge Code

MW	R134a, R513A*, R450A*, R1234ze*R1234yf*		
SW	R404A, R507, R425A*	**NW**	R407C, R454C*
ZW	R410A, R32*	**BW**	R448A, R449A, R454A*, R455A*

NOTE:*) Superheat readjustment required - see Operating Instruction

Step 3: Single Selection – Flange

Valve type	Power Element	Orifice	Flange Style						Connection (Inlet x Outlet)	
			Angle		Part No.	Straight through		Part No.	metric	imperial
TCLE	XB1019...B	X22440-B1B X22440-B2B X22440-B3B X22440-B3.5B X22440-B4B X22440-B5B X22440-B6B X22440-B7B X22440-B8B		**C501-5**	**803232**		**9761-3**	**803240**	-	3/8” x 5/8” ODF
				C501-5mm	**803233**		**9761-3mm**	**803241**	10 x 16 mm ODF	-
				**C501-7**	**803234**		**9761-4**	**803350**	-	1/2” x 5/8” ODF
				C501-7mm	**803235**		**9761-4mm**	**803243**	12 x 16 mm ODF	-
			-	-	-		**6346-17**	**803330**	16 x 22 mm ODF	5/8” x 7/8” ODF
				**A576**	**803238**	-	-	-	-	5/8” x 7/8” ODF 7/8” x 1-1/8” ODM
				A576-mm	**803239**		-	-	16 x 22 mm ODF 22 x 28 mm ODM	-
TJRE		X11873-B4B X11873-B5B		**10331**	**803338**		**10332**	**803324**	22 x 22 mm ODF	7/8” x 7/8” ODF 1-1/8” x 1-1/8” ODM
TERE TIRE	XC726...B	X9117-B6B X9117-B7B X9117-B8B X9117-B9B X9117-B10B		**9153**	**803244**		**9152**	**803286**	-	7/8” x 7/8” ODF 1-1/8”x1-1/8” ODM
				9153-mm	**803245**		**9152-mm**	**803287**	22 x 22 mm ODF 28 x 28 mm ODM	-
THRE		X9144-B11B X9144-B13B		**9149**	**803284**		**9148**	**803283**	22 x 22 mm ODF	7/8”x7/8” ODF 1-1/8”x1-1/8” ODM

Type code - Valve Kit TCLE/ TJRE/ TERE / TIRE / THRE - e.g. TCLE250MW55WL2B1/2X5/8

T	⌂⌂	E	⌂⌂⌂⌂	⌂⌂	⌂⌂	⌂⌂	⌂⌂	⌂⌂ x ⌂⌂

Valve Series

Type

CL / JR	Small Capacity
ER / IR/ HR	Large Capacity
	Balanced port

External Equalizer

Capacity Code

25…1600

Refrigerant Charge Code

MW	R134a, R513A*, R450A*, R1234ze*R1234yf*		
SW	R404A, R507, R425A*	**NW**	R407C, R454C*
ZW	R410A, R32*	**BW**	R448A, R449A, R454A*, R455A*

MOP Code

blank	Without MOP
15…175	MOP

Flange Style

WL	angled
DL	Straight through

Capillary tube length

blank	1.5 m (TCLE, TJRE)		
blank	3.0 m (TERE, TIRE, THRE)		
2B	3.0 m	**4B**	6.0 m

Connection

Inlet x outlet

NOTE:*) Superheat readjustment required - see Operating Instruction

Selection Table Accessories and Spare Parts

Type	Part No.	Description	Illustration
X 99999	**800005**	Service Tool for T, ZZ, L and 935 Series valves	
X 13455	**027579**	Gasket sets for T, ZZ, L and 935 Series valves	
Screw ST 32	**803573**	Steel Screws for flange types: C501, 9761, 6346, A576	
Screw ST 48	**803574**	Steel Screws for flange types: 9148, 9149, 9152, 9153, 10331, 10332	
XA 1728-4	**803260**	Bulb clamp for XB1019	
XA 1728-5	**803261**	Bulb clamp for XC726	

Technical Data

Max. allowable Pressure PS XB… Power element XC… Power element	 46 bar 31 bar
Max. Test Pressure PT XB… Power element XC… Power element	 50.6 bar 34.1 bar
Temperatures TS Medium	 -45 … +75 °C
Flange connections	Brass ODF or ODM
Vibration Resistance (for fastened valve, non-connected)	4g (0…1000 Hz, 1 octave/min)
Shock	20 g at 11 ms 80 g at 1 ms

Materials power element valve head	Stainless steel
Materials capillary tube & bulb XB… Power element XC… Power element	 copper zinc plated copper
Released Refrigerants	See Selection tables A1 & A2L
Standards	RoHS compliant
Delivery	Single Package
Markings	CE not required

Dimension (mm)

GENERAL

Valve (Kit)	Illustration	Power Element	Flange		Inlet x Outlet	I	J	L
TCLE	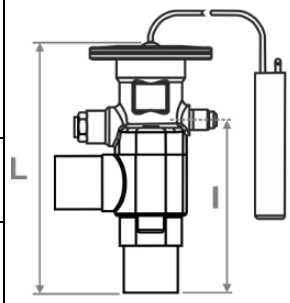	XB1019...1B	Angled	C501-5	3/8” x 5/8” ODF	57	-	106
				C501-5mm	10 x 16 mm ODF	57	-	105
				C501-7	1/2” x 5/8” ODF	61	-	113
				C501-7mm	12 x 16 mm ODF-	61	-	108
				A576	5/8” x 7/8” ODF 7/8” x 1-1/8” ODM	77	-	124
				A576-mm	16 x 22 mm ODF 22 x 28 mm ODM	77	-	124
TJRE				10331	22 x 22 mm ODF 7/8” x 7/8” ODF 1-1/8” x 1-1/8” ODM	93	-	140
TERE TIRE		XC726...2B		9153	7/8” x 7/8” ODF 1-1/8”x1-1/8” ODM	93	-	140
				9153-mm	22 x 22 mm ODF 28 x 28 mm ODM	93	-	140
THRE				9149	22 x 22 mm ODF 7/8” x 7/8” ODF 1-1/8”x1-1/8” ODM	107		154
TCLE	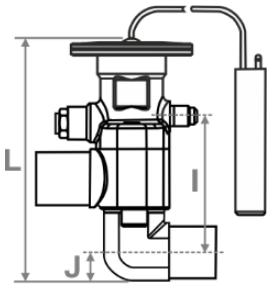	XB1019...1B	Straight through	9761-3	3/8” x 5/8” ODF	31	17	95
				9761-3mm	10 x 16 mm ODF	31	17	95
				9761-4	1/2” x 5/8” ODF	31	17	95
				9761-4mm	12 x 16 mm ODF-	31	17	95
				6346-17	16 x 22mm ODF 5/8” x 7/8” ODF	33	17	95
TJRE				10332	22 x 22 mm ODF 7/8” x 7/8” ODF 1-1/8” x 1-1/8” ODM	74.5	16.5	137
TERE TIRE		XC726...2B		9152	7/8” x 7/8” ODF 1-1/8” x 1-1/8” ODM	74.5	16.5	139
				9152-mm	22 x 22 mm ODF 28 x 28 mm ODM	74.5	16.5	139
THRE				9148	22 x 22 mm ODF 7/8” x 7/8” ODF 1-1/8” x 1-1/8” ODM	74.5	16.5	139

POWER ELEMENT

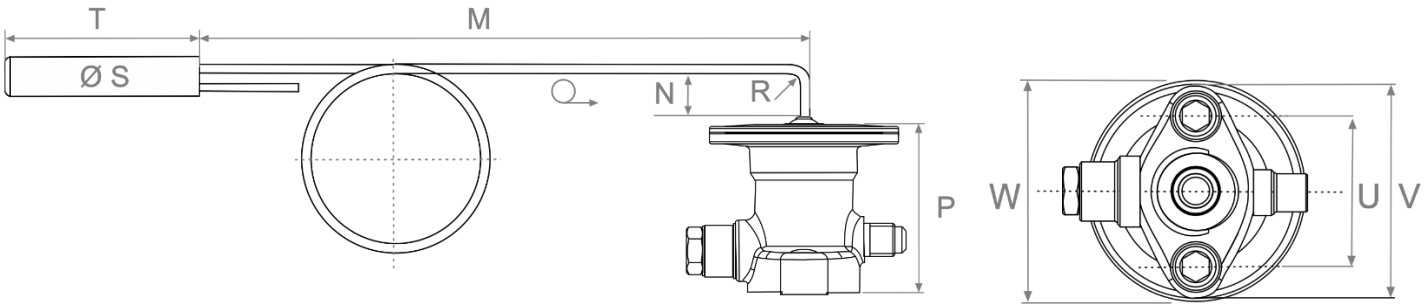

Power Element Type	M	N	S	T	Binding radius R (minimum)	P	U	V	W
XB1019 …-1B	1.5 m	15	16	78	10 mm	58	44.5	62	65
XB1019 …-2B	3.0 m	15	16	78	10 mm	58	44.5	62	65
XC762…-2B	3.0 m	-	19	124	-	60	44.5	62	73
XC762…-4B	6.0 m	-	19	124	-	60	44.5	62	73

FLANGES - ANGLED

C501-5
C501-5mm
C501-7
C501-7mm

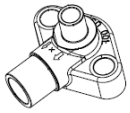

Side view

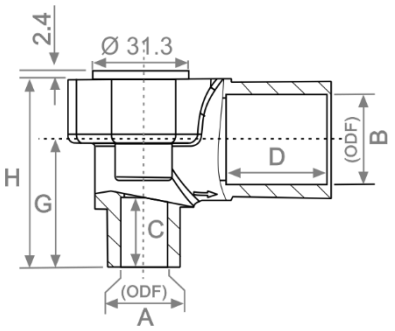

Bottom view

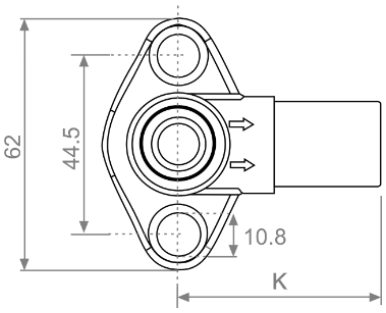

A576
A576-mm



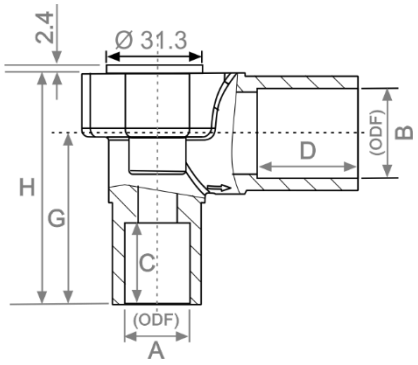

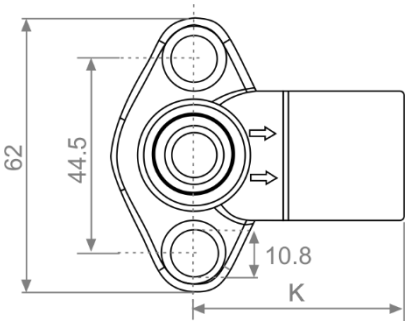

10331
9153
9153-mm
9149

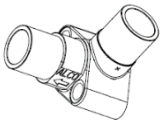

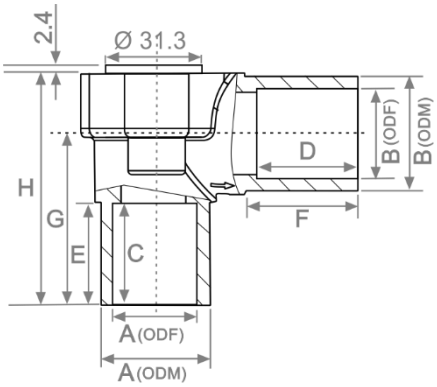

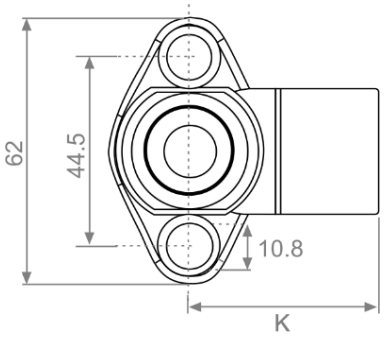

Type	ODF		ODM		(mm)						
	Inlet A	Outlet B	Inlet A	Outlet B	C	D	E	F	G	H	K
C501-5	3/8”	5/8”	-	-	14	21	-	-	27	39	40
C501-5mm	10 mm	16 mm	-	-	14	21	-	-	27	39	40
C501-7	1/2”	5/8”	-	-	17	21	-	-	30	42	40
C501-7mm	12 mm	16 mm	-	-	17	21	-	-	30	42	40
A576	5/8”	7/8”	7/8”	1-1/8”	21	25	-	-	43	58	50
A576-mm	16 mm	22 mm	22 mm	28 mm	21	25	25	28	43	58	50
10331	22 mm / 7/8”	22 mm / 7/8”	1-1/8”	1-1/8”	19	19	25	25	59	74	51
9153	7/8”	7/8”	1-1/8”	1-1/8”	19	19	25	25	59	74	51
9153-mm	22 mm	22 mm	28 mm	28 mm	19	19	25	25	59	74	51
9149	22 mm / 7/8”	22 mm / 7/8”	1-1/8”	1-1/8”	19	19	-	-	73	88	51

FLANGES – STRAIGHT THROUGH

9761-3 mm
9761-3
9761-4 mm
9761-4

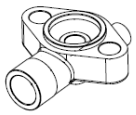

Side view

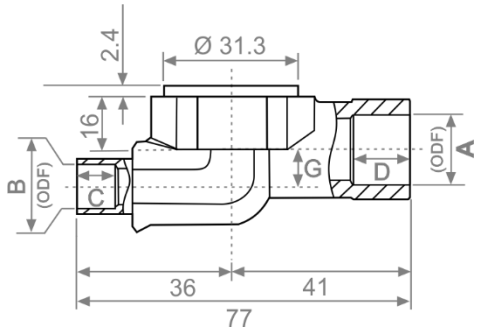

Bottom view

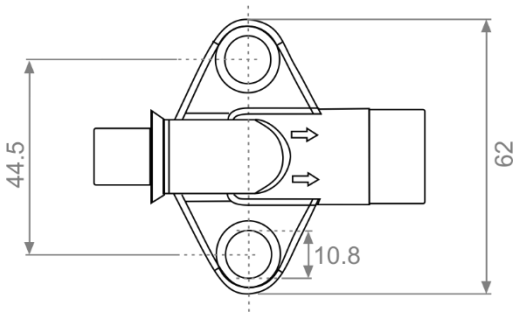

6346-17

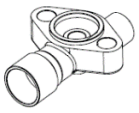

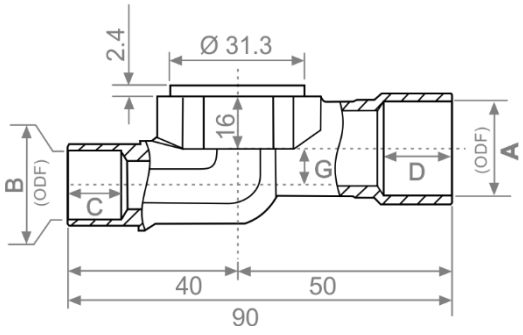

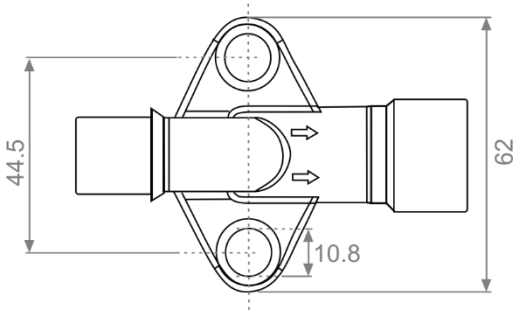

10332
9152
9152-mm
9148



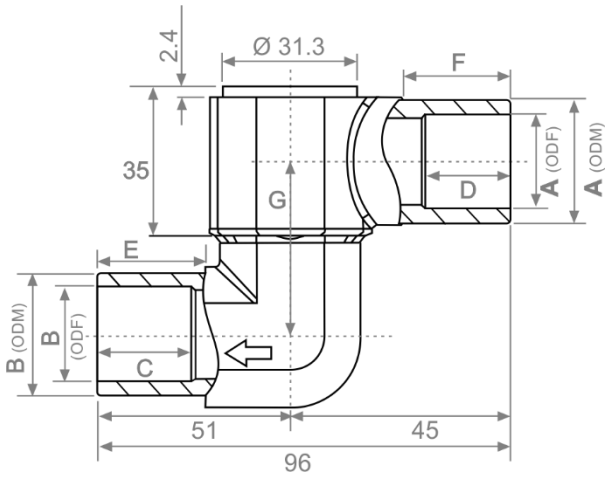

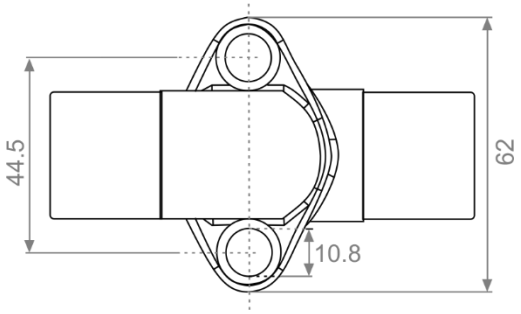

Type	ODF		ODM		mm				
	Inlet A	Outlet B	Inlet A	Outlet B	C	D	E	F	G
9761-3 mm	3/8”	5/8”	-	-	9	13	-	-	8.5
9761-3	10 mm	16 mm	-	-	9	13	-	-	8.5
9761-4 mm	1/2”	5/8”	-	-	9	13	-	-	8.5
9761-4	12 mm	16 mm	-	-	9	13	-	-	8.5
6346-17	16 mm / 5/8”	22 mm /7/8”	-	-	12.7	16	-	-	8.5
10332	22 mm / 7/8”	22 mm / 7/8”	1-1/8”	1-1/8”	19	19	25	25	40.9
9152	7/8”	7/8”	1-1/8”	1-1/8”	19	19	25	25	40.9
9152-mm	22 mm	22 mm	28 mm	28 mm	19	19	25	25	40.9
9148	22 mm / 7/8”	22 mm / 7/8”	1-1/8”	1-1/8”	19	19	25	25	40.9

DISCLAIMER: The Copeland logo is a trademark and service mark of Copeland LP or one of its affiliates. Copeland Europe GmbH shall not be liable for errors in the stated capacities, dimensions, etc., as well as typographic errors. Products, specifications, assumptions, designs and technical data contained in this document are subject to modification by us without prior notice. Illustrations are not binding. ©2024 Copeland LP. All rights reserved.